ARO®

HANLEY CONTROLS
CLONMEL

www.hccl.ie

COMPACT AND PRO SERIES DIAPHRAGM PUMPS

FOR GENERAL INDUSTRIAL AND OEM INSTALLATION APPLICATIONS

Ingersoll Rand

HANLEY CONTROLS
CLONMEL

www.hccl.ie

ARO® is a manufacturer of fluid management products that are skillfully engineered to deliver performance and serviceability, allowing success to flow freely in our customers' businesses. That's why ARO® is fluid intelligence—the smart choice in fluid management products for industrial operations. With over an 85-year legacy of premier product performance and service excellence, ARO® provides fluid management equipment for customers and industries around the globe, including chemical, manufacturing, energy, pharmaceutical, mining and more.

ARO® has the right product to meet our customers' specific needs. We offer air-operated diaphragm pumps, piston pumps and packages, filters, regulators, and lubricators (FRLs), lubrication equipment, and pneumatic valves and cylinders.

Product and Technical Support

Every ARO® product is backed by a highly qualified team of engineers dedicated to designing products that promote success around the world. Because ARO® products are built to be as simple as they are smart, customers benefit from efficient operation and high performance for excellent total cost of ownership.

At ARO® we make success flow

HANLEY CONTROLS
CLONMEL

www.hccl.ie

Table of Contents

- Features 4
- Non-Metallic Models 7
- Metallic Models 25
- Specialty Pumps 40
  - 3:1 High Ratio Pump
    - Pit Boss
    - Automatic Dewatering System
    - Centrifugal
    - Fuel Anti-Freeze / Water Blending
    - U/L Approved
    - Calcium Chloride Tire Fill
    - Drum Pumps
- Accessories 47
- Maintenance Kits 52

ARO® Air operated Diaphragm Pumps

HANLEY CONTROLS CLONMEL
www.hccl.ie

ARO® Pro Series air operated diaphragm pumps are ideal for general industrial and OEM installation applications. They can easily pump from clean, light viscosity fluids to corrosive, abrasive medium viscosity fluids and can transfer large particles without damage. Due to their pneumatic motor, they may be used in potentially explosive areas. Most of the ARO® diaphragm pumps are ATEX certified (CE Ex11 2GD X).

ARO® PRO and EXP Series pumps offer the ability to vary the flow outlet and discharge pressure as slow as 0.26 gallons (1liter) per minute up to 275 gallons (1040 liter) per minute for our larger sizes and adjust fluid pressure up to 125 p.si. (8.6 bar), by using just an air filter / regulator and a needle valve.

Why ARO® diaphragm pumps?

- Sealess Design
- Low Material Shear
- Ease of Maintenance
- Can Run Dry Without Damage
- Portable
- Self Priming
- Easy-to-Install

Find your opportunity

ARO® AUTHENTIC ARO PARTS

Exactly built and designed by ARO®, Authentic ARO® Parts are the replacement parts you can count on to restore your ARO® equipment to original performance and quality levels, while backing up your warranty.

Though a part may look like an ARO® part, unless the part carries the Authentic ARO® Parts name and was bought from one of our authorized distributors, the part does not carry the ARO® promise and runs the risk of subpar chemical, metallurgical, and mechanical properties.

Don't risk the downtime. Use Authentic ARO® Parts every time.

Visit AROzone.com to learn more.

Smart Motor Design

COMPACT SERIES PUMPS 1/4" - 3/4"

HANLEY CONTROLS
CLONMEL
www.hccl.ie

All ARO® Comapct Series diaphragm pumps feature an unbalanced valve design, which eliminates valve centering and pump stall-out-even under low air inlet pressures.

"D" Valve

- Provides a positive seal.
- Helps insure optimum energy efficiency while avoiding costly air "blow-by."
- Ceramic construction insures long service life.

"SimulShift™" Valve

- Provides an ultra-positive, reliable shift signal that avoids stall-out.
- Provides faster pump trip-over with more flow.
- Faster trip-over with less pulsation and superior laminar material flow.

Diaphragm Moving Right to Left

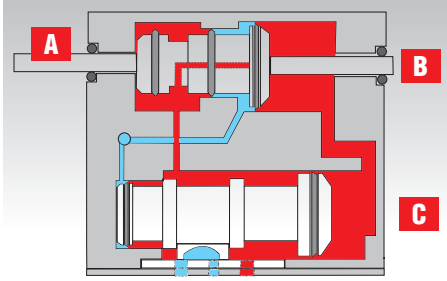

1) The diaphragm pushes the right Actuator Pin (B) mechanically moving the SimulShift Valve (A) to the left.
2.) Compressed air flows to the large side of the SimulShift Valve, pneumatically moving the valve to the position shown.
3.) Compressed air also flows to the large end of the Major Air Valve (C), pneumatically shifting it to the left.

Diaphragm Moving from Left to Right

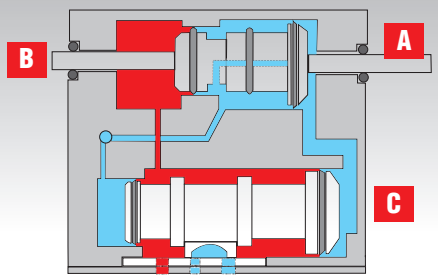

At end of stroke:

1.) Diaphragm pushes Pin (B) and SimulShift Valve (A) to the right.
2.) Large ends of SimulShift Valve (A) and Major Valve (C) are vented to exhaust pilot signal.
3.) Constant compressed air supply acting on the smaller areas of the SimulShift Valve and Major Valve shifts both valves to the right and holds them in position until the next cycle begins.

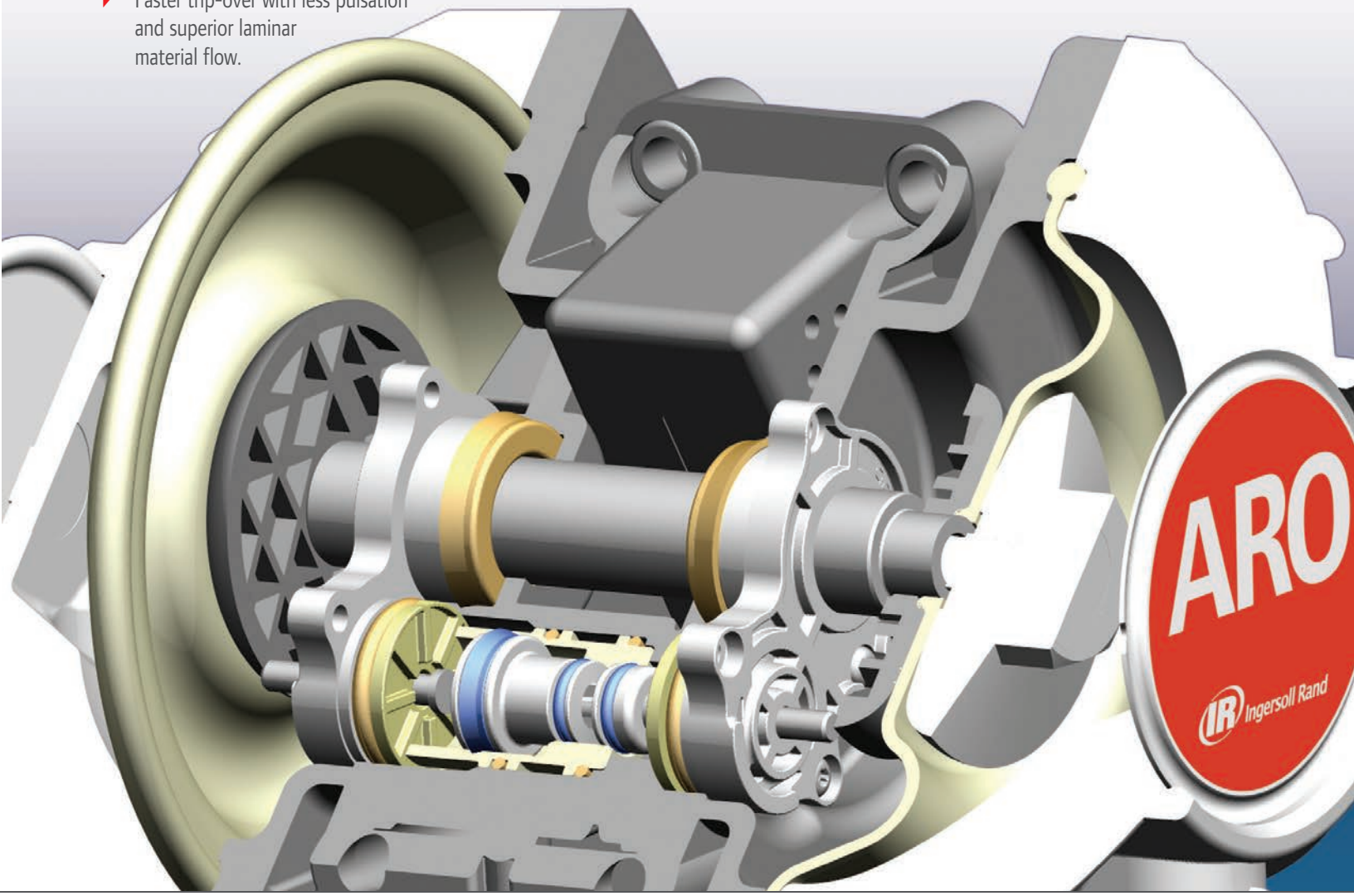

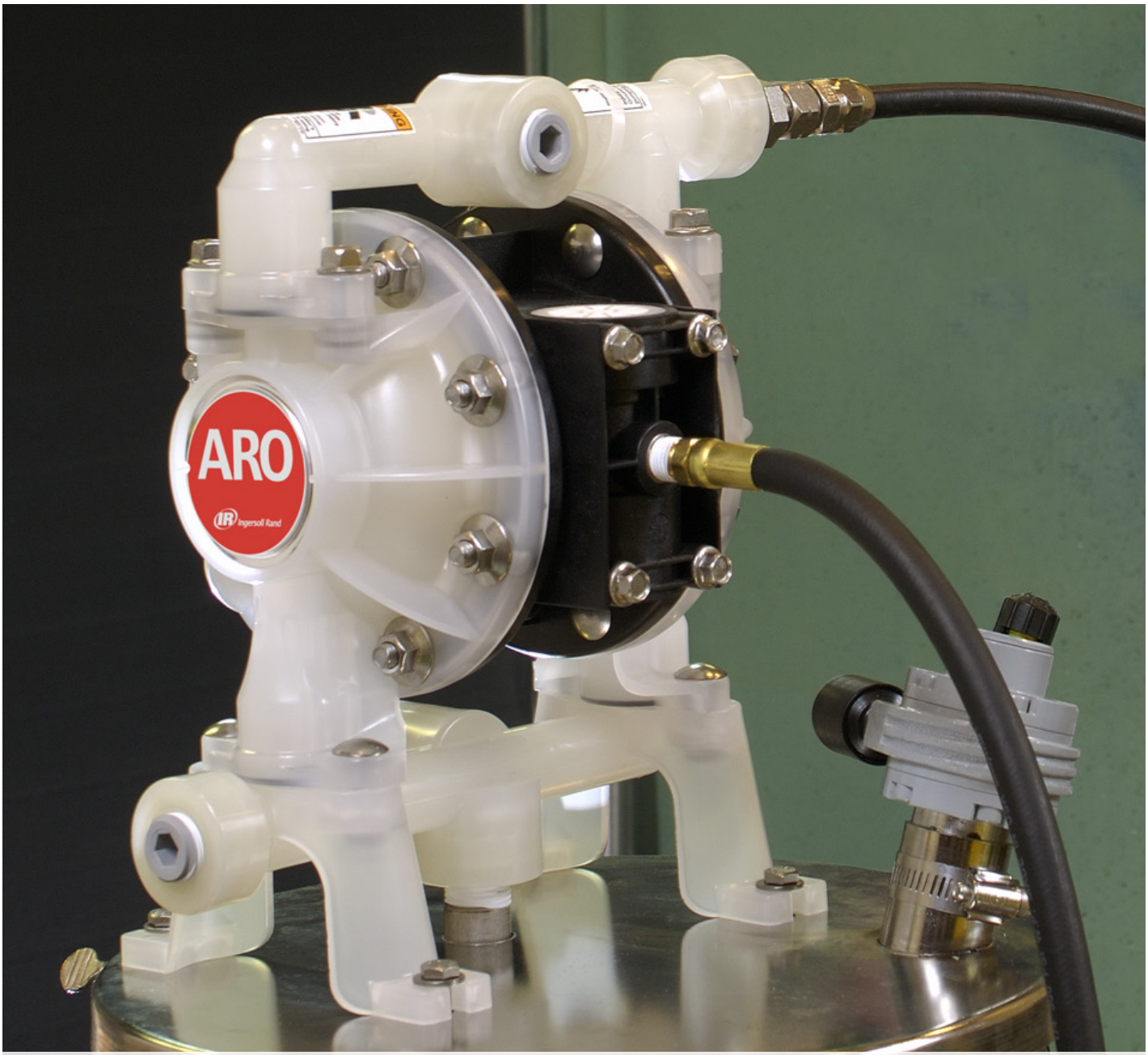

Non-Metallic Models

The ARO® non-metallic offering consists of polypropylene, acetal and PVDF. All ARO® pumps are available with convoluted diaphragms offering long lasting life and reduced maintenance.

Non-Metallic Model Overview

Model	1/4"	3/8"	1/2"	1/2" Classic	3/4"	1"	1-1/2"	2"
Maximum Flow GPM (LPM)	5.3 (20)	10.6 (40.1)	14.4 (54.5)	13 (49.2)	14.8 (56)	47 (178)	100 (378.5)	145 (548.8)
Maximum Discharge Pressure PSI (BAR)	125 (8.6)	100 (6.9)	100 (6.9)	100 (6.9)	100 (6.9)	120 (8.3)	120 (8.3)	120 (8.3)
Fluid Ports Inlet/Outlet (BSP Available)	1/4" NPTF/BSPT and 3/4"-14 NPTF/BSPT	3/8 - 18 NPTF - 1 Rp 3/8 (3/8 - 19 BSP)	1/2 - 14 NPTF - 1 Rp 1/2 (1/2 - 14 BSP)	1/2-14 N.P.T.F.-1	3/4 - 14 NPTF-1 Rp 3/4(3/4-14 BSP, parallel)	1" ANSI/DIN Flange 1" (F) Threaded	1-1/2" ANSI Flange	2" ANSI Flange
Materials of Construction	Polypropylene Groundable Acetal PVDF	Polypropylene Groundable Acetal PVDF	Polypropylene Groundable Acetal PVDF	Polypropylene Groundable Acetal PVDF	Polypropylene	Polypropylene	Polypropylene	Polypropylene
Pump Weight lbs. (kg.)	Poly 2.86 (1.3) PVDF 3.88 (1.76) Acetal 3.52 (1.6)	4.2 (1.9) PD03P-XDS-X 4.3 (1.9) PD03P-XES-X 4.5 (2.0) PD03P-XKS-X 4.6 (2.1) PD03P-XLS-X 3.4 (1.6) PD03P-XPS-X 3.5 (1.6) PD03P-XRS-X	6.3 (2.9) PD05P-XDS-X-B 6.7 (3.0) PD05P-XES-X-B 6.8 (3.1) PD05P-XKS-X-B 7.2 (3.3) PD05P-XLS-X-B 5.2 (2.4) PD05P-XPS-X-B 5.4 (2.5) PD05P-XRS-X-B	7.2 (3.3) Polypropylene 8.8 (4.0) Ground. Acetal 9.5 (4.3) Kynar PVDF	5.61 (2.54)	20.3 (9.2) Poly 28.8 (13.1) Poly w/ Cast Iron Center	62 (28.1) Poly 85 (38.5) Poly w/ Cast Iron Center	62 (28.1) Poly 85 (38.5) Poly w/ Cast Iron Center
Maximum Solids Inches (mm)	1/16 (1.6)	1/16 (1.6)	3/32 (2.4)	3/32 (2.4)	3/32 (2.4)	1/8 (3.2)	1/4 (6.4)	1/4 (6.4)
Best Selling Models (BSP Available)	PD01E-HDS-DAA-A PD01E-HDS-DTT-A PD01P-HKS-KTT-A PD01P-HPS-PAA-A PD01P-HPS-PGG-A PD01P-HPS-PTT-A	PD03P-ADS-DTT PD03P-AES-DCC PD03P-AES-DCC PD03P-AKS-KTT PD03P-APS-PAA PD03P-APS-PTT	PD05P-AKS-KTT-B PD05P-ALS-KTT-B PD05P-APS-PAA-B PD05P-APS-PTT-B PD05P-ARS-PAA-B PD05P-ARS-PGG-B PD05P-ARS-PTT-B PD05P-ARS-PUU-B	666053-0D2 666053-311 666053-344 666053-388 666053-3EB 66605J-344 66605J-388 66605J-3EB	PD07P-APS-PAA PD07P-APS-PCC PD07P-APS-PTT	6661A3-322-C 6661A3-344-C 6661A3-3EB-C 6661AJ-322-C 6661AJ-344-C 6661AJ-3EB-C 6661B3-344-C	6661T3-344-C 6661T3-3EB-C 6661T4-444-C 6661U3-344-C 6661U3-3EB-C	6662A3-244-C 6662A3-311-C 6662A3-344-C 6662A3-3EB-C 6662B3-344-C 6662B3-3EB-C
Recommended Filter/ Regulator	P39124-600	P39124-600	P39124-600	P39124-600	P39124-600	P39224-600	P39344-600	P39354-600
Air Line Kit	66073-1	66073-1	66073-1	66073-1	66073-1	66073-1	66084-1	66109

Compact Series *PRO Series*

1/4" Non-Metallic Models

COMPACT SERIES PUMPS

Part of our Compact Series of pumps, our 1/4" pumps feature big performance in a compact package. They feature flow rates up to 5.3 GPM (20 LPM), a wide range of material options, multi-port versions and the unique hybrid male/female threaded fluid connections.

Ratio:	1:1
Maximum Flow gpm (lpm):	5.3 (20)
Displacement per cycle gal (l):	.019 (.072)
Air Inlet (Female):	1/4 - 18 PTF SAE Short
Fluid Inlet/Outlet Hybrid:	Internal Thread 1/4"NPTF/BSPT
	External Thread 3/4" - 14 NPTF/BSPT
Max. operating pressure psi (bar):	125 (8.6)
Suspended solids max. dia in (mm):	.0625 (1.66)
Weight lbs (kg):	2.86 (1.3) Polypropylene
	3.88 (1.76) PVDF
	3.52 (1.60) Acetal
Maximum dry suction lift ft (m) :	15 (4.6)
Sound Level:	70 PSI 60 Cycles/Min 62.3 db(A)
Muffler:	Integral, Included

PD01P-HPS-PCC-A

Ordering

Position	1	2		3	4	5		6	7	8		9		10	11
Example:	PX01	X	-	H	X	S	-	X	X	X	-	A	-	X	X

Position 1 Model Series	Position 2 Center Section	Position 3 Fluid Connections	Position 4 Wetted Parts	Position 5 Hardware	Positon 6 Seat Material	Position 7 Ball Material	Position 8 Diaphragm Material	Position 9 Revision	Position 10 & 11 Specialty Code
PD01 - Standard Pump PE01- Elec. Interface Accessible Pump	E - Conductive Polypro-pylene F - Polypro-pylene with leak failure detection P - Polypro-pylene	H - 1/4" NPT BSP hybrid	D - Groundable Acetal E - Groundable Acetal (Multiple port) K - Kynar PVDF L - Kynar PVDF (Multiple port) P - Polypropylene R – Polypropylene (Multiple port)	S - Stainless Steel	D - Acetal K - PVDF P - Polypro-pylene 0 - Polypro-pylene (Flex-Check spacer)* 1 - Acetal (Flex-Check spacer)* 2 - PVDF (Flex-Check spacer)*	A - Santoprene® C - Hytrel® G - Nitrile J - Nitrile (Flex-Check only) K - EPR (Flex-Check only) L - Viton® (Flex-Check only) N - Neoprene (Flex-Check only) T - PTFE	A - Santoprene® C - Hytrel® G - Nitrile T - PTFE	A - Revision 1	Fluid control options for pump with electronic interface (PE01 model). See complete description on page 9

Hytrel® is a registered trademark of DuPont company, Santoprene® is registered trademark of Monsanto and Viton® is a registered trademark of ExxonMobil

Accessories

Air Line Connection Kit | 66073-1
(Piggyback Filter/Regulator with gauge, pipe nipple and 5-foot air hose)

1/4" Non-Metallic Dimensions and Flow Charts

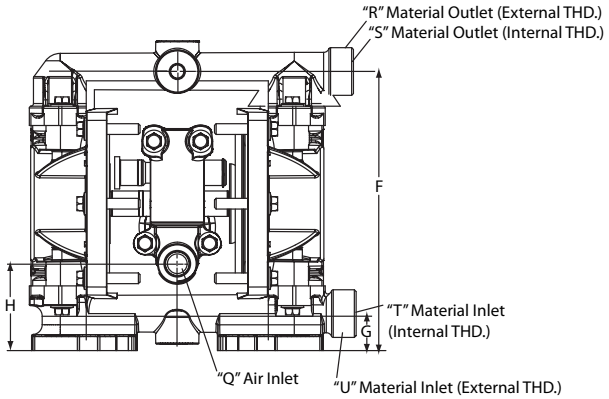

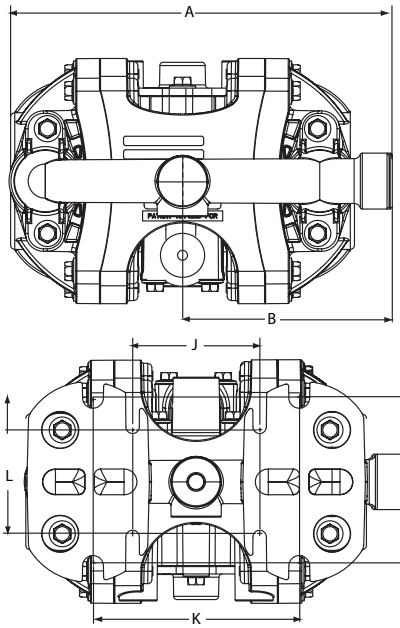

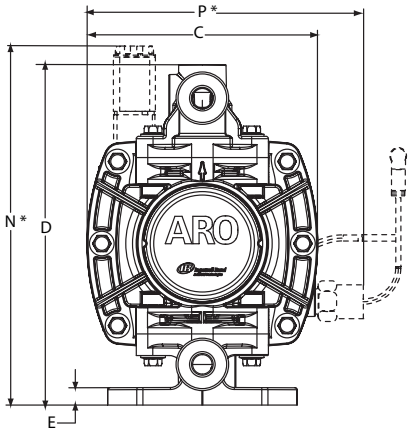

DIMENSIONS

Dimensions shown are for reference only, they are displayed in inches and millimeters (mm).

A - 7.2" (182 mm)	H- 1.9" (48.6 mm)	Q - 1/4 - 18 PTF SAE Short
B - 3.9" (100.0 mm)	J - 2.4" (61 mm)	R- 3/4-14 NPTF
C - 4.6" (117.0 mm)	K - 3.9" (99 mm)	S - 1/4 NPTF / BSPT Hybrid
D- 6.8" (173.0 mm)	L - 2.1" (53 mm)	T - 1/4 NPTF / BSPT Hybrid
E- 0.3" (8.8 mm)	M - 3.2" (81 mm)	U- 3/4-14 NPTF
F- 6.1 " (156 mm)	N - 7.2" (184 mm)	V- 1/4 NPTF
G- 0.8" (20.7 mm)	P - 5.6" (142.2 mm)	

PD01P-XXS-XXX 1/4" NON-METALLIC DIAPHRAGM PUMP

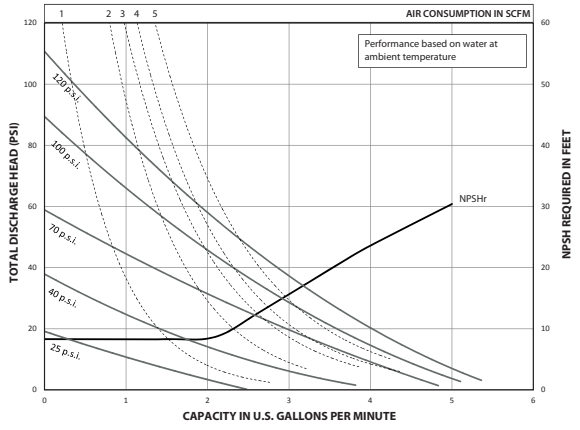

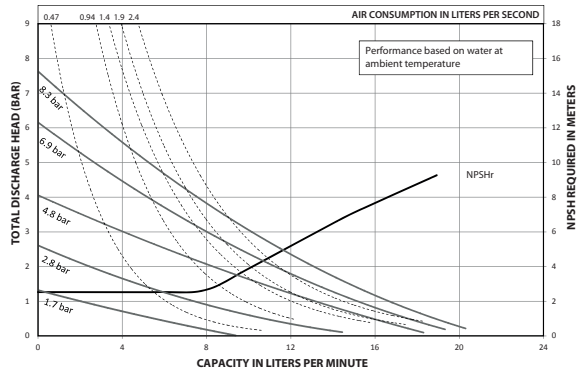

Performance based on an elastomeric fitted pump, flooded suction with water at ambient conditions. Due to varying materials of construction, assembly configurations and operating conditions, published data is for reference only.

Ordering Position 10

Specialty Code 1 (Blank if no Specialty Code)

A - Solenoid 120VAC
B - Solenoid 12VDC
C - Solenoid 240VAC
D - Solenoid 24VDC
E - 12vDC NEC/CEC
F - 24vDC NEC/CEC
G - Solenoid 12VDC ATEX/IECex
H - Solenoid 24VDC ATEX/IECex
J - 120VAC NEC/CEC
K - Solenoid 220VAC ATEX/IECex
N - Solenoid with no coil
0 - Standard Valve Block (No Solenoid)

Ordering Position 11

Specialty Code 2 (Blank if no Specialty Code)

E - End of stroke feedback + Leak Detection
F - End of stroke feedback
G - End of Stroke ATEX/IECex/NEC/CEC
H - End of Stroke/Leak Detection ATEX/IECex/NEC/CEC
L - Leak Detection
M - Leak Detection ATEX/IECex/NEC/CEC
0 - No Option

3/8″ Non-Metallic Models

COMPACT SERIES PUMPS

Part of our Compact Series of pumps, our 3/8″ pumps feature big performance in a small package. They feature flow rates up to 10.6 GPM (40.1 LPM) and a wide range of material and porting configurations.

Ratio:	1:1
Maximum Flow gpm (lpm):	10.6 (40.1) 8.7 (32.9) Flex check
Displacement per cycle gal (l):	.022 (0.083) .018 (0.068) Flex check
Air Inlet: (Female)	1/4 - 18 PTF SAE Short
Fluid Inlet/Outlet:	3/8 - 18 PTF - 1 Rp 3/8 (3/8 - 19 BSP, parallel)
Max. operating pressure psi (bar):	100 (6.9)
Suspended solids max. dia in (mm):	.0625 (1.6) Flex check (Fibers)
Weight lbs (kg):	PD03P-XDS-XXX 4.2 (1.9) PD03P-XES-XXX 4.3 (1.9) PD03P-XKS-XXX 4.5 (2.0) PD03P-XLS-XXX 4.6 (2.1) PD03P-XPS-XXX 3.4 (1.6) PD03P-XRS-XXX 3.5 (1.6)
Maximum dry suction lift ft (m):	9.25 (2.8)
Sound Level:	70 PSI 60 Cycles/Min 72.7 db(A)
Muffler:	Integral, Included

PD03P-APS-PCC

PD03P-ADS-DTT

Ordering

Position	1	2		3	4	5		6	7	8		9		10	11
Example:	PX03	P	-	X	X	S	-	X	X	X	-	B	-	X	X

Position 1 Model Series	Position 2 Center Section	Position 3 Connections	Position 4 Manifold Material	Position 5 Hardware	Positon 6 Seat Material	Position 7 Ball Material	Position 8 Diaphragm Material	Position 9
D - Standard E - Remote Actuation Capable	P - Poly-propylene	A - 3/8" NPT B - 3/8" BSP	D - Ground. Acetal (single port) E - Ground. Acetal (multiple port) K - PVDF (single port) L - PVDF (multiple port) P - Polypropylene (single port) R - Polypropylene (multiple port)	S - Stainless Steel	D - Acetal K - PVDF P - Poly-propylene S - Stainless Steel 0 - Flex Check	A - Santoprene® C - Hytrel® I - Nitrile J - Nitrile** L - Viton®** N - Neoprene** S - Stainless Steel T - PTFE V - Viton ** Flex check	A - Santoprene® C - Hytrel® G - Nitrile T - PTFE/ Santoprene V - Viton	Revision Level **Position 10 & 11 Specialty Code** Fluid control options for pump with electronic interface (PE03 model). See complete description on page 11

Hytrel® is a registered trademark of DuPont company, Santoprene® is registered trademark of Monsanto and Viton® is a registered trademark of ExxonMobil

Accessories

Air Line Connection Kit | 66073-1
(Piggyback Filter/Regulator with gauge, pipe nipple and 5-foot air hose)
Wall Mount Bracket Kit | 67388
Optional Muffler | used with 637428 kit
Service Repair Kits | 637428 (air section)
637429-XX (fluid section)

Air Line Connection Kit 66073-1

Wall Mount Bracket Kit 67388

3/8" Non-Metallic Dimensions and Flow Charts

PE03P-APS-PAA-B0S with 637442-1 Kit

Dual Inlet/Outlet Kits:
637442-1 (N.P.T. Poly)
637442-4 (BSP Poly)
637442-3 (N.P.T. PVDF)
637442-6 (BSP PVDF)
637442-2 (N.P.T. Acetal)
637442-5 (BSP Acetal)

DIMENSIONS

A	7-29/32" (200.2 mm)	F	4-7/8" (123.9 mm)	L	1-3/32" (27.8 mm)
B	8-7/16" (214.3 mm)	G	9-7/32" (234.2 mm)	M	3/8" (9.5 mm)
C	5-9/16" (141.3 mm)	H	4" (101.6 mm)	N	4-11/32" (110.1 mm)
D	1-1/4" (31.8 mm)	J	4-3/4" (120.7 mm)	P	4-11/32" (110.3 mm)
E	5-23/32" (145.2 mm)	K	9/32" (7.1 mm)	Q	2-25/32" (70.6 mm)

Model	"R" Material Inlet	"S" Material Outlet
PD03P-AXS-XXX	3/8 - 18 N.P.T.F. - 1	3/8 - 18 N.P.T.F. - 1
PD03P-BXS-XXX	Rp 3/8 (3/8 - 19 BSP)	Rp 3/8 (3/8 - 19 BSP)

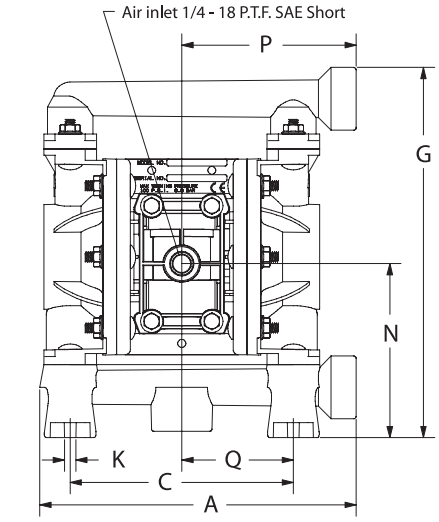

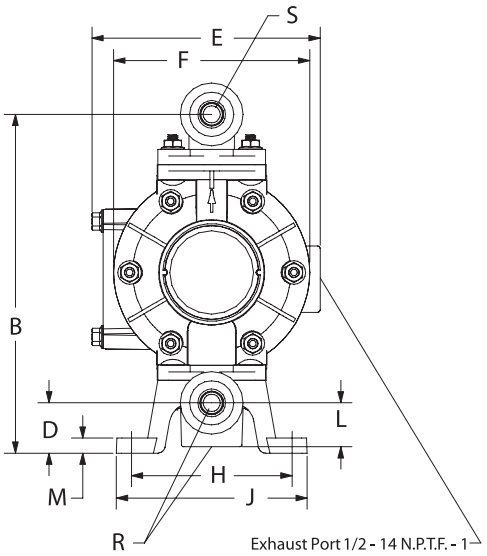

PERFORMANCE CURVES

PD03P-XXS-XXX 3/8" NON-METALLIC DIAPHRAGM PUMP

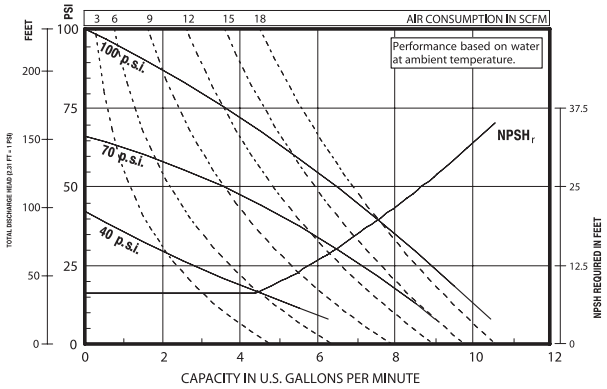

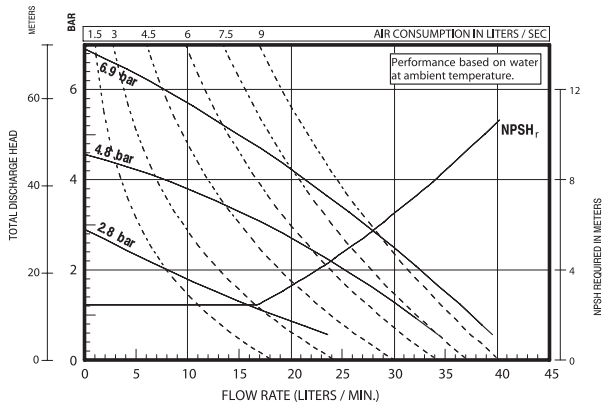

Performance based on an elastomeric fitted pump, flooded suction with water at ambient conditions. Due to varying materials of construction, assembly configurations and operating conditions, published data is for reference only.

Ordering Position 10

Specialty Code 1 (Blank if no Specialty Code)

A - Solenoid 120VAC
B - Solenoid 12VDC
C - Solenoid 240VAC
D - Solenoid 24VDC
E - 12vDC NEC/CEC
F - 24vDC NEC/CEC
G - Solenoid 12VDC ATEX/IECex
H - Solenoid 24VDC ATEX/IECex
J - 120VAC NEC/CEC
K - Solenoid 220VAC ATEX/IECex
N - Solenoid with no coil
0 - Standard Valve Block (No Solenoid)

Ordering Position 11

Specialty Code 2 (Blank if no Specialty Code)

E - End of stroke feedback + Leak Detection
F - End of stroke feedback
G - End of Stroke ATEX/IECex/NEC/CEC
H - End of Stroke/Leak Detection ATEX/IECex/NEC/CEC
L - Leak Detection
M - Leak Detection ATEX/IECex/NEC/CEC
0 - No Option

1/2" Non-Metallic Models

COMPACT SERIES PUMPS

Part of our Compact Series of pumps, our 1/2" compact pumps feature big performance in a small package. With flow rates up to 14.4 GPM (54.5 LPM) and a wide range of material and porting configurations.

Ratio:	1:1
Maximum Flow gpm (lpm):	14.4 (54.5)
Displacement per cycle gal (l):	.039 (.15)
Air Inlet: (Female)	1/4 - 18 PTF SAE Short
Fluid Inlet/Outlet:	1/2 - 14 NPTF - 1 Rp 1/2 (1/2 -14 BSP, parallel)
Max. operating pressure psi (bar):	100 (6.9)
Suspended solids max. dia in (mm):	.09375 (2.4)
Weight lbs (kg):	PD05P-XDS-XXX-B 6.3 (2.9) PD05P-XES-XXX-B 6.7 (3.0) PD05P-XKS-XXX-B 6.8 (3.1) PD05P-XLS-XXX-B 7.2 (3.3) PD05P-XPS-XXX-B 5.2 (2.4) PD05P-XRS-XXX-B 5.4 (2.5)
Maximum dry suction lift ft (m):	15.0 (4.5)
Sound Level:	70 PSI 60 Cycles/Min 75.0 db(A)
Muffler:	Integral, Included

PD05P-ARS-PAA

Ordering

Position	1	2		3	4	5		6	7	8		9		10	11
Example:	PX05	P	-	X	X	S	-	X	X	X	-	B	-	X	X

Position 1 Model Series	Position 2 Center Section	Position 3 Connections	Position 4 Manifold Material	Position 5 Hardware	Positon 6 Seat Material	Position 7 Ball Material	Position 8 Diaphragm Material	Position 9
D - Standard E - Remote Actuation Capable	P - Poly-propylene	A - 1/2 - 14 NPTF - 1 B - Rp 1/2 (1/2 -14 BSP, parallel)	D - Ground. Acetal (single port) E - Ground. Acetal (multiple port) K - PVDF (single port) L - PVDF (multiple port) P - Polypropylene (single port) R - Polypropylene (multiple port)	S - Stainless Steel	D - Acetal K - PVDF P - Poly-propylene S - Stainless Steel	A - Santoprene® C - Hytrel® G - Nitrile S - Stainless Steel T - PTFE U - Polyurethane V - Viton®	A - Santoprene® C - Hytrel® G - Nitrile L - Long-Life PTFE T - PTFE/ Santoprene U - Polyurethane V - Viton®	Revision Level **Position 10 & 11 Specialty Code** Fluid control options for pump with electronic interface (PE05 model). See complete description on page 13

Hytrel® is a registered trademark of DuPont company, Santoprene® is registered trademark of Monsanto and Viton® is a registered trademark of ExxonMobil

Accessories

Air Line Connection Kit | 66073-1
(Piggyback Filter/Regulator with gauge, pipe nipple and 5-foot air hose)
Wall Mount Bracket Kit | 76763
Optional Muffler | 93110 used with 637438 kit
Service Repair Kits | 637428 (air section)
637427-XX (fluid section)

Air Line Connection Kit 66073-1

1/2" Non-Metallic Dimensions and Flow Charts

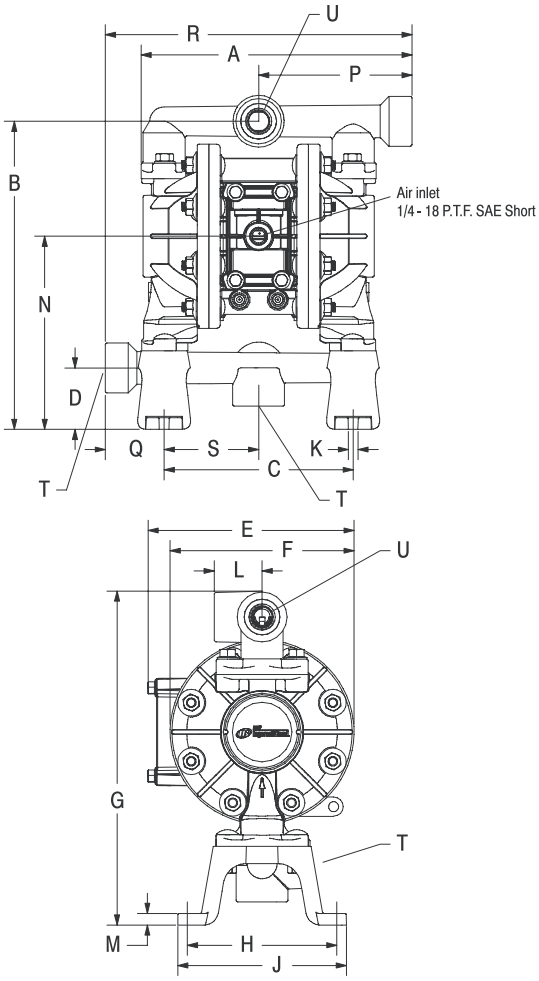

DIMENSIONS

A 8-27/32" (224.3 mm)	G 10-7/8" (275.7 mm)	N 6-5/16" (159.9 mm)
B 10-1/16" (255.0 mm)	H 4-7/8" (123.8 mm)	P 5" (127.0 mm)
C 6.164" (156.6 mm)	J 5-1/2" (139.7 mm)	Q 1-59/64" (48.8 mm)
D 2" (50.8 mm)	K 5/16" (8.0 mm)	R 10" (254.0 mm)
E 6-23/32" (170.6 mm)	L 1-9/16" (39.7 mm)	S 3-3/32" (78.3 mm)
F 6" (152.4 mm)	M 3/8" (9.5 mm)	

Model	"T" Material Inlet	"U" Material Outlet
PD05P-AXS-XXX-B	1/2 - 14 N.P.T.F. - 1	1/2 - 14 N.P.T.F. - 1
PD05P-BXS-XXX-B	Rp 1/2 (1/2 - 14 BSP)	Rp 1/2 (1/2 - 14 BSP)

PE05P-APS-PAA-B0S with 637440-1 Kit

Dual Inlet/Outlet Kits:
637440-1 (N.P.T. Poly)
637440-4 (BSP Poly)
637440-2 (N.P.T. Acetal)
637440-5 (BSP Acetal)
637440-3 (N.P.T. PVDF)
637440-6 (BSP PVDF)

PERFORMANCE CURVES

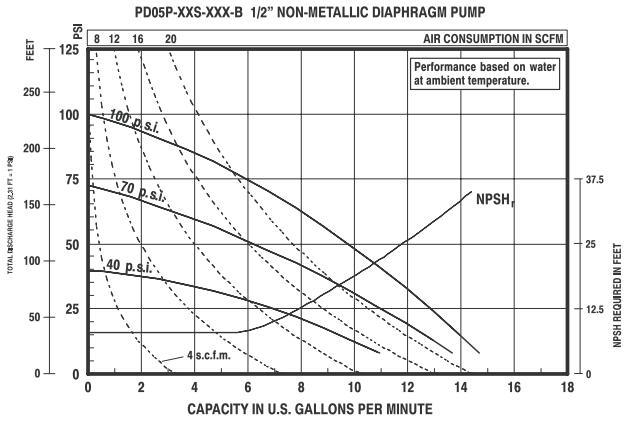

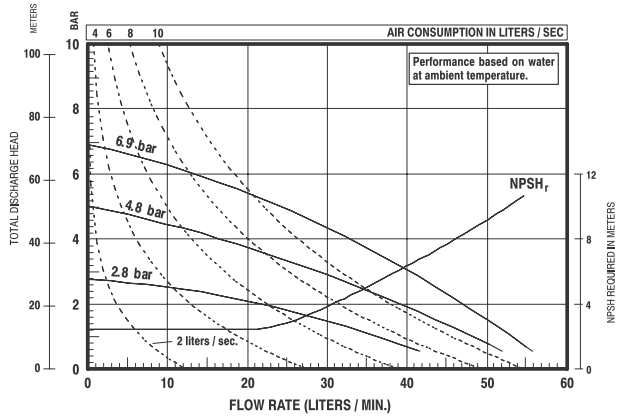

Performance based on an elastomeric fitted pump, flooded suction with water at ambient conditions. Due to varying materials of construction, assembly configurations and operating conditions, published data is for reference only.

Ordering Position 10

Specialty Code 1 (Blank if no Specialty Code)

A - Solenoid 120VAC
B - Solenoid 12VDC
C - Solenoid 240VAC
D - Solenoid 24VDC
E - 12vDC NEC/CEC
F - 24vDC NEC/CEC
G - Solenoid 12VDC ATEX/IECex
H - Solenoid 24VDC ATEX/IECex
J - 120VAC NEC/CEC
K - Solenoid 220VAC ATEX/IECex
N - Solenoid with no coil
0 - Standard Valve Block (No Solenoid)

Ordering Position 11

Specialty Code 2 (Blank if no Specialty Code)

E - End of stroke feedback + Leak Detection
F - End of stroke feedback
G - End of Stroke ATEX/IECex/NEC/CEC
H - End of Stroke/Leak Detection ATEX/IECex/NEC/CEC
L - Leak Detection
M - Leak Detection ATEX/IECex/NEC/CEC
0 - No Option

HANLEY CONTROLS
CLONMEL
www.hccl.ie

1/2" Classic Style Non-Metallic Models

COMPACT SERIES PUMPS

Part of our Compact Series of pumps, our 1/2" classic pumps feature big performance in a small package. With flow rates up to 13 GPM (49.2 LPM) and a wide range of material and porting configurations.

Ratio:	1:1
Maximum Flow gpm (lpm):	ball 13 (49.2) duckbill 10 (37.9)
Displacement per cycle gal (l):	ball .04 (.15) duckbill .032 (0.12)
Air Inlet: (Female)	1/4 - 18 NPTF - 1
Fluid Inlet/Outlet:	1/2 - 14 NPTF - 1
Max. operating pressure psi (bar):	100 (6.9)
Suspended solids max. dia in (mm):	ball .09375 (2.4) duckbill fibers
Weight lbs (kg):	Polypropylene 7.2 (3.3) Groundable Acetal 8.8 (4.0) Kynar PVDF 9.5 (4.3)
Sound Level:	70 PSI 60 Cycles/Min 71.1 db(A)
Muffler:	Integral, Included

66605J-3EB

Ordering

Position	1	2		3	4	5		6
Example:	66605	X	-	X	X	X	-	04

Position 1 Model Series	Position 2 Fluid Caps and Manifold Material	Position 3 Seat Section	Position 4 Ball Material	Position 5 Diaphragm Material	Positon 6 Cone Check Flow
Base Model	3 - Polypropylene 6 - Groundable Acetal 7 - Pure PVDF J - Polypropylene* H - Groundable Acetal* K - Pure PVDF* *Single piece manifold	0 - Duckbill 2 - Stainless Steel 3 - Polypropylene 4 - PVDF 6 - Acetal	1 - Neoprene 2 - Nitrile 3 - Viton® 4 - PTFE 8 - Polyurethane A - Stainless Steel C - Neoprene** D - Nitrile** E - Santoprene® **Flex-check Models	1 - Neoprene 2 - Nitrile 3 - Viton® 4 - PTFE/Santoprene 8 - Polyurethane 9 - Hytrel B - Santoprene® L - Long-Life PTFE	04 - Top Discharge

Hytrel® is a registered trademark of DuPont company, Santoprene® is registered trademark of Monsanto and Viton® is a registered trademark of ExxonMobil

Accessories

Air Line Connection Kit | 66073-1
(Piggyback Filter/Regulator with gauge, pipe nipple and 5-foot air hose)
Optional Muffler | 93110 used with 637438 kit
Service Repair Kits | 637141 (air section)
637140-XX (fluid section)

93110

Air Line Connection Kit
66073-1

1/2" Non-Metallic Dimensions and Flow Charts

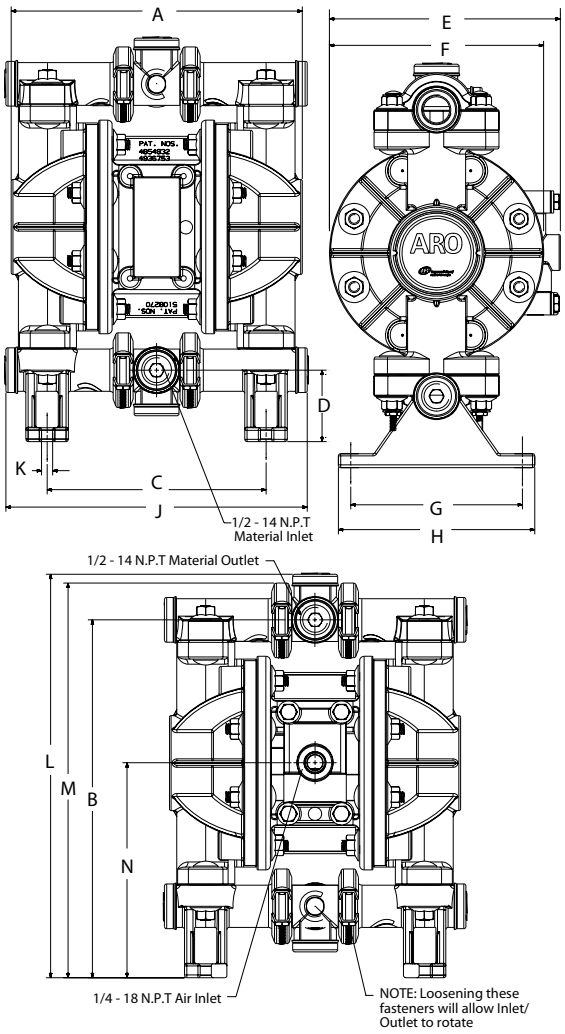

NOTE: Dimensions are shown in inches and (mm) and are supplied for reference only.

A -	8.155" (207.1 mm)	E -	6.467" (164 mm)	J -	8.44 5" (2 15 mm)
B -	10.051" (255 mm)	F -	6.000" (152 mm)	K -	0.31 2" (8 mm)
C -	6.135" (155.8 mm)	G -	4.812" (122.2 mm)	L -	11 .331" (2 88 mm)
D -	2.005" (51 mm)	H -	5.500" (140 mm)	M -	11 .08 4" (2 82 mm)
				N -	6.040" (153 mm)

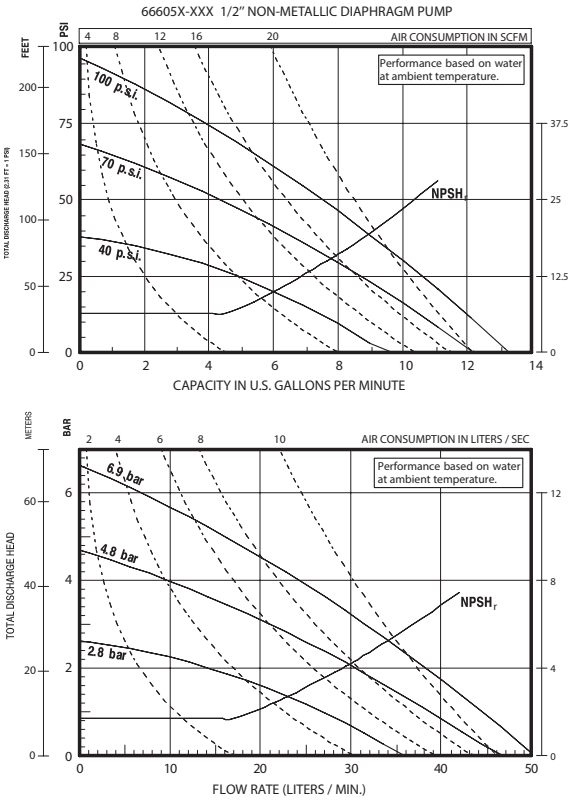

Performance based on an elastomeric fitted pump, flooded suction with water at ambient conditions. Due to varying materials of construction, assembly configurations and operating conditions, published data is for reference only.

3/4" Non-Metallic Models

COMPACT SERIES PUMPS

Part of our Compact Series of pumps, our 3/4" pumps feature big performance in a small package. With flow rates up to 14.8 GPM (56 LPM) and a wide range of material and porting configurations.

Ratio:	1:1
Maximum Flow gpm (lpm):	14.8 (56)
Displacement per cycle gal (l):	.032 (.12)
Air Inlet: (Female)	1/4 - 18 PTF SAE Short
Fluid Inlet/Outlet:	3/4 - 14 NPTF - 1 Rp 3/4 (3/4 -14 BSP, parallel)
Max. operating pressure psi (bar):	100 (6.9)
Suspended solids max. dia in (mm):	.09375 (2.4)
Weight lbs (kg):	5.61 (2.54)
Maximum dry suction lift ft (m):	15.0 (4.5)
Sound Level:	70 PSI 60 Cycles/Min 75.0 db(A)

PD07P-APS-PAA

Ordering

Position	1	2		3	4	5		6	7	8		9		10	11
Example:	PD07	P	-	X	X	S	-	X	X	X	-	B	-	X	X

Position 1 Model Series	Position 2 Center Section	Position 3 Connections	Position 4 Manifold Material	Position 5 Hardware	Positon 6 Seat Material	Position 7 Ball Material	Position 8 Diaphragm Material	Position 9
PD07 - Standard Pump PE07 - Remote Actuation Capable	P - Poly-propylene	A - 14 - 3/4" NPTF-1 B - Rp 3/4 (3/41/2 -14 BSP, parallel)	P - Poly-propylene (Single Port)	S - SS	P - Poly-propylene	A - Santoprene® C - Hytrel® T - PTFE	A - Santoprene® C - Hytrel® L - Long-Life PTFE T - PTFE	Revision Level **Position 10 & 11 Specialty Code** Fluid control options for pump with electronic interface (PE07 model). See complete description on page 17

Hytrel® is a registered trademark of DuPont company, Santoprene® is registered trademark of Monsanto and Viton® is a registered trademark of ExxonMobil

Accessories

Air Line Connection Kit | 66073-1
(Piggyback Filter/Regulator with gauge, pipe nipple and 5-foot air hose)
Muffler Kit | 637438 (ported exhaust) 3/8" NPT
Service Repair Kits | 637428 (air section)
637427-XX (fluid section)
Wall Mount | 76763

Air Line Connection Kit 66073-1

3/4" Non-Metallic Dimensions and Flow Charts

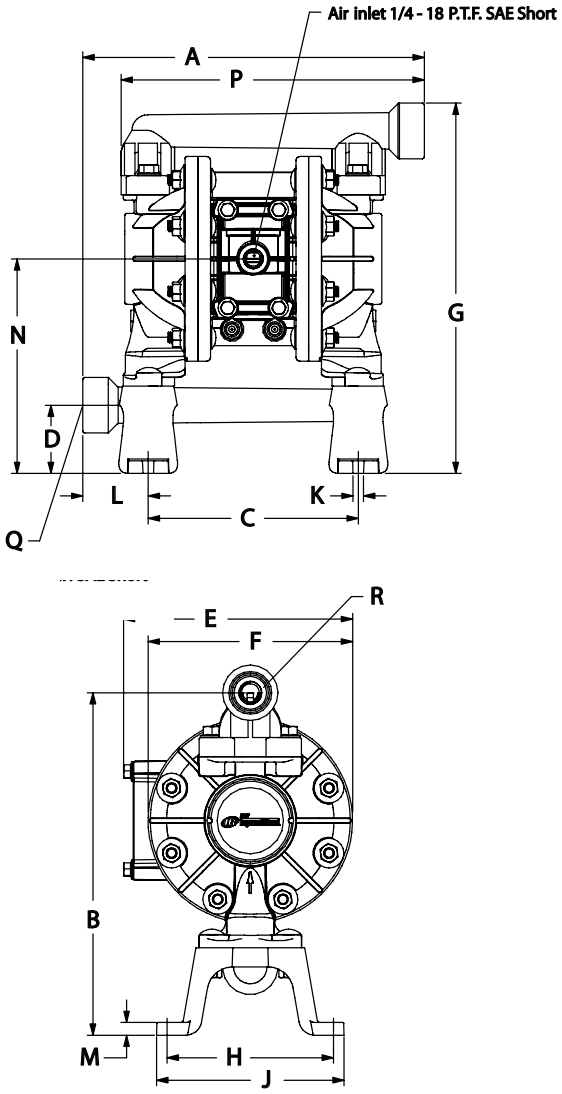

DIMENSIONS

A - 10" (254.2 mm)	F - 6-1/32" (153.1mm)	L - 1-15/16" (48.9mm)
B - 10-3/32" (256.1mm)	G - 10-29/32" (276.8mm)	M - 3/8" (9.6mm)
C - 6-3/16" (157.1mm)	H - 4-29/32" (124.2 mm)	N - 6-5/16" (160.5mm)
D - 2" (51.0mm)	J - 5-17/32" (140.2mm)	P - 8-7/8" (225.3mm)
E - 6-3/4" (171.0mm)	K - 5/16" (8.0mm)	

Model	"Q" Material Inlet	"R" Material Outlet
PD07P-APS-PXX	3/4- 14 N.P.T.F. - 1	3/4- 14 N.P.T.F. - 1
PD07P-BPS-PXX	Rp 3/4 (3/4- 14 BSP)	Rp 3/4 (3/4- 14 BSP)

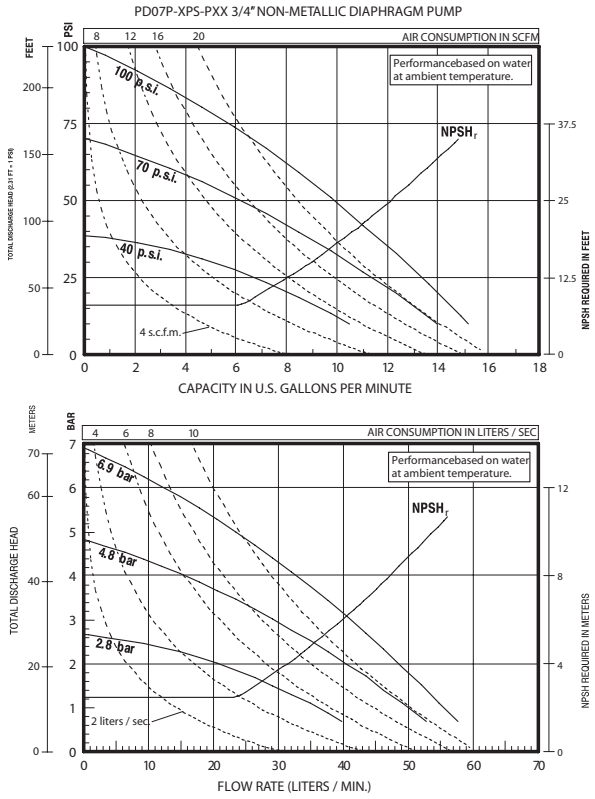

Performance based on an elastomeric fitted pump, flooded suction with water at ambient conditions. Due to varying materials of construction, assembly configurations and operating conditions, published data is for reference only.

Ordering Position 10

Specialty Code 1 (Blank if no Specialty Code)

A - Solenoid 120VAC
B - Solenoid 12VDC
C - Solenoid 240VAC
D - Solenoid 24VDC
E - 12vDC NEC/CEC
F - 24vDC NEC/CEC
G - Solenoid 12VDC ATEX/IECex
H - Solenoid 24VDC ATEX/IECex
J - 120VAC NEC/CEC
K - Solenoid 220VAC ATEX/IECex
N - Solenoid with no coil
0 - Standard Valve Block (No Solenoid)

Ordering Position 11

Specialty Code 2 (Blank if no Specialty Code)

E - End of stroke feedback + Leak Detection
F - End of stroke feedback
G - End of Stroke ATEX/IECex/NEC/CEC
H - End of Stroke/Leak Detection ATEX/IECex/NEC/CEC
L - Leak Detection
M - Leak Detection ATEX/IECex/NEC/CEC
0 - No Option

HANLEY CONTROLS
CLONMEL
www.hccl.ie

1″ Non-Metallic Models

PRO SERIES PUMPS

ARO® PRO 1″ non-metallic diaphragm pumps are a versatile solution for numerous applications. Our PRO 1″ models achieve flow rates of up to 47 GPM (178 LPM) and offer a wide array of material and porting configurations. These pumps are often used for transfer, filling, recirculation and supply in Chemical, Industrial and Water/Wastewater treatment markets.

Ratio:	1:1
Maximum Flow gpm (lpm):	47 (177.9)
Displacement per cycle gal (l):	.17 (0.64)
Air Inlet: (Female)	1/4 - 18 NPT
Fluid Inlet/Outlet:	1 - 11-1/2 NPTF - 1 Rp 1 (1 - 11 BSP, parallel) 1″ ANSI/DIN Hybrid Center Flange
Max. operating pressure psi (bar):	120 (8.3)
Suspended solids max. dia in (mm):	.125 (3.2)
Weight lbs (kg):	6661A3-, 1AF-, 1AJ-, 1AL- 20.3 (9.2) 6661B3-, 1BF-, 1BJ-, 1BL- 28.8 (13.1)
Maximum dry suction lift ft (m):	15 (4.6)
Sound Level:	70 PSI 60 Cycles/Min 64.5 db(A)

6661AJ-3EB-C

6661A3-244-C

Ordering

Position	1	2		3	4	5		6
Example:	6661X	X	-	X	X	X	-	C

Position 1 Center Body	Position 2 Fluid Caps Manifold Material	Position 3 Seat Material	Position 4 Ball Check Material	Position 5 Diaphragm Material
A - Aluminum B - Cast Iron	3 - Polypropylene Flange (3-piece manifold) F - Polypropylene Flange (one-piece manifold) J - Polypropylene N.P.T. threads (one piece manifold) L - Polypropylene BSP threads (one-piece manifold)	2 - 316 Stainless Steel 3 - Polypropylene 4 - PVDF (Kynar) 8 - Hard 400 Stainless Steel	1 - Neoprene 2 - Nitrile 3 - Viton® 4 - PTFE 5 - E.P.R. 8 - Polyurethane A - 316 Stainless Steel C - Hytrel® E - Santoprene®	1 - Neoprene 2 - Nitrile 3 - Viton® 4 - PTFE/ Santoprene® 5 - E.P.R. 9 - Hytrel® B - Santoprene®

Hytrel® is a registered trademark of DuPont company, Santoprene® is registered trademark of Monsanto and Viton® is a registered trademark of ExxonMobil

Accessories

Air Line Connection Kit | 66073-2
(Piggyback Filter/Regulator with gauge, pipe nipple and 5-foot air hose)
Service Repair Kits | 637118-C (air section)
637161-XX-C (fluid section)
Flange Connection Kit | 67078 Kit meets ANSI specifications.
Flange constructed of glass-filled polypropylene. Bolts, washers and nuts are stainless steel. Gasket is 4401 klinger synthetic fiber nitrile binder.

Air Line Connection Kit
66073-2

Flange Connection Kit
67078

1" Non-Metallic Dimensions and Flow Charts

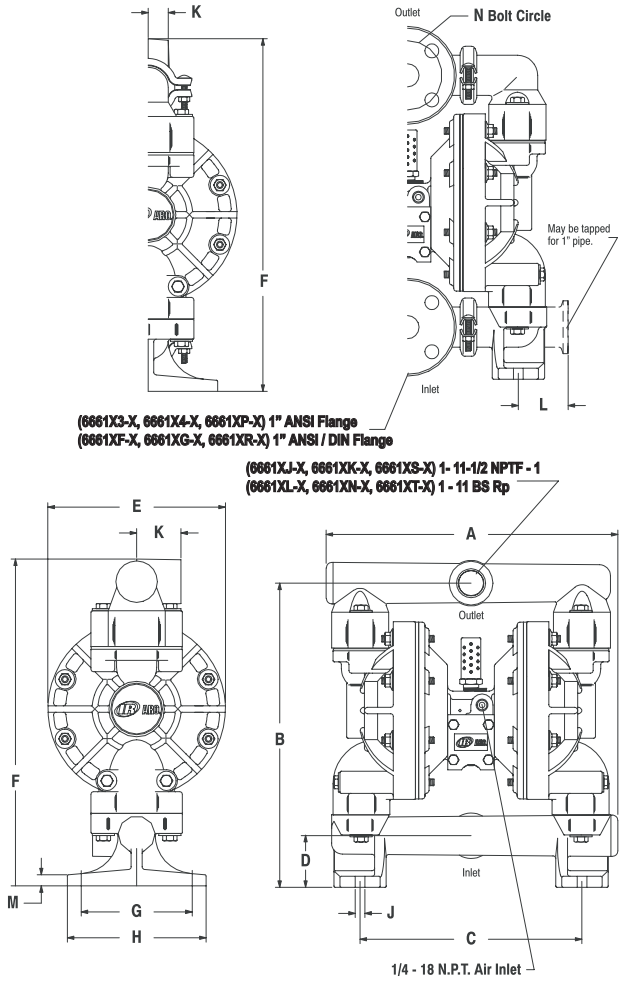

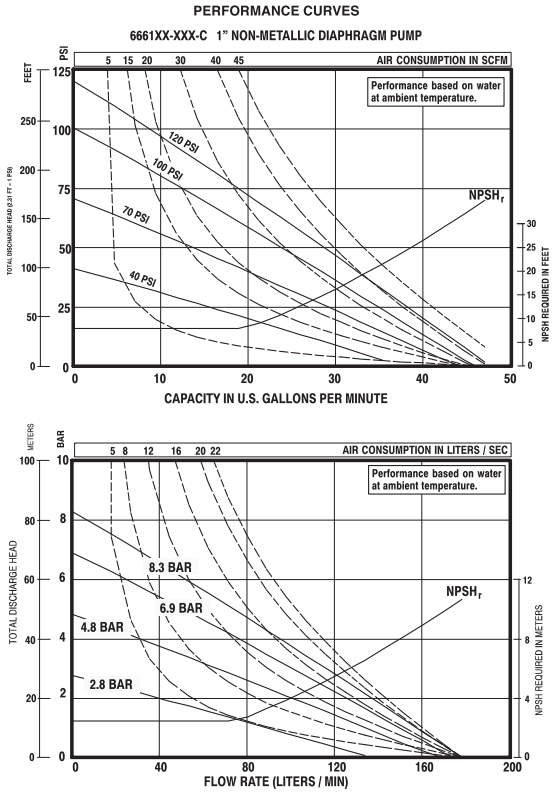

Performance based on an elastomeric fitted pump, flooded suction with water at ambient conditions. Due to varying materials of construction, assembly configurations and operating conditions, published data is for reference only.

DIMENSIONS

	6661X3-X	6661XJ-X 6661XL-X
A	12-21/32" (321 mm)	13-5/32" (334 mm)
B	13-25/32" (349 mm)	13-25/32" (350 mm)
C	10-1/16" (255 mm)	10-1/16" (255 mm)
D	2-3/8" (60 mm)	2-11/32" (59 mm)
E	8-1/16" (204 mm)	8-1/16" (204 mm)
F	16" (406 mm)	14-13/16" (376 mm)
G	5-1/32" (128 mm)	5-1/32" (128 mm)
H	6-9/32" (160 mm)	6-9/32" (160 mm)
J	7/16" (11 mm)	7/16" (11 mm)
K	15/16" (23 mm)	2" (51 mm)
L	2-9/32" (57 mm)	
M	1/2" (13 mm)	1/2" (13 mm)
N	3.140" (80 mm)	

	6661XK-X 6661XN-X
A	13-5/32" (334 mm)
B	13-25/32" (350 mm)
C	10-1/16" (255 mm)
D	2-11/32" (59 mm)
E	8-1/16" (204 mm)
F	16" (406 mm)
G	5-1/32" (128 mm)
H	6-9/32" (160 mm)
J	7/16" (11 mm)
K	1-1/32" (26 mm)
L	
M	1/2" (13 mm)
N	3.140" (80 mm)

	6661XF-X
A	13-5/32" (334 mm)
B	13-25/32" (350 mm)
C	10-1/16" (255 mm)
D	2-11/32" (59 mm)
E	8-1/16" (204 mm)
F	16" (406 mm)
G	5-1/32" (128 mm)
H	6-9/32" (160 mm)
J	7/16" (11 mm)
K	1-1/32" (26 mm)
L	
M	1/2" (13 mm)
N	3.140" (80 mm)

HANLEY CONTROLS
CLONMEL
www.hccl.ie

1-1/2" Non-Metallic Models

PRO SERIES PUMPS

PRO 1-1/2" non-metallic diaphragm pumps are frequently used in transfer, filling, recirculation and supply in Chemical, Industrial and Water/Wastewater treatment markets. Our 1-1/2" models achieve flow rates of up to 100 GPM (378.5 LPM) and also offer a diverse selection of material and porting configurations.

Ratio:	1:1
Maximum Flow gpm (lpm):	100 (378.5)
Displacement per cycle gal (l):	.67 (2.54)
Air Inlet (Female):	1/2 - 14 NPTF - 1
Fluid Inlet/Outlet:	1-1/2" ANSI Center Flange
Max. operating pressure psi (bar):	120 (8.3)
Suspended solids max. dia in (mm):	.25 (6.4)
Weight lbs (kg):	6661T3-X-C 62 (28.1) Note: Add 23 (10.4) for cast iron air motor section
Maximum dry suction lift ft (m):	14 (4.27)
Sound Level:	70 PSI 60 Cycles/Min 77.7 db(A)

6661T3-389-C

Ordering

Position	1	2		3	4	5		6
Example:	6661X	X	-	X	X	X	-	C

Position 1 Center Body	Position 2 Fluid Caps Manifold Material	Position 3 Seat Material	Position 4 Ball Check Material	Position 5 Diaphragm Material
T - Aluminum U - Cast Iron	3 - Polypropylene Flange (3-piece manifold) 4 - P.V.D.F. (Kynar)	2 - 316 Stainless Steel 3 - Polypropylene 4 - P.V.D.F. (Kynar) 8 - Hard 400 Stainless Steel	1 - Neoprene 2 - Nitrile 3 - Viton® 4 - PTFE 8 - Polyurethane C - Hytrel® E - Santoprene®	1 - Neoprene 2 - Nitrile 3 - Viton® 4 - PTFE / Santoprene 9 - Hytrel® B - Santoprene®

Hytrel® is a registered trademark of DuPont company, Santoprene® is registered trademark of Monsanto and Viton® is a registered trademark of ExxonMobil

Accessories

Air Line Connection Kit | 66084-1
(Piggyback Filter/Regulator with gauge, pipe nipple and 5-foot air hose)
Service Repair Kits | 637118-C (air section)
637165-XX (fluid section)
Flange Connection Kit | 67079 Kit meets ANSI specifications.
Flange constructed of glass-filled polypropylene. Bolts, washers and nuts are stainless steel. Gasket is 4401 klinger synthetic fiber nitrile binder.

Flange Connection Kit 67079

1-1/2" Non-Metallic Dimensions and Flow Charts

All dimensions are given in inches and millimeters (mm).

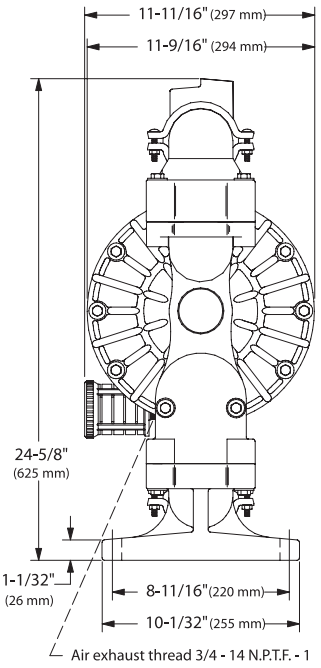

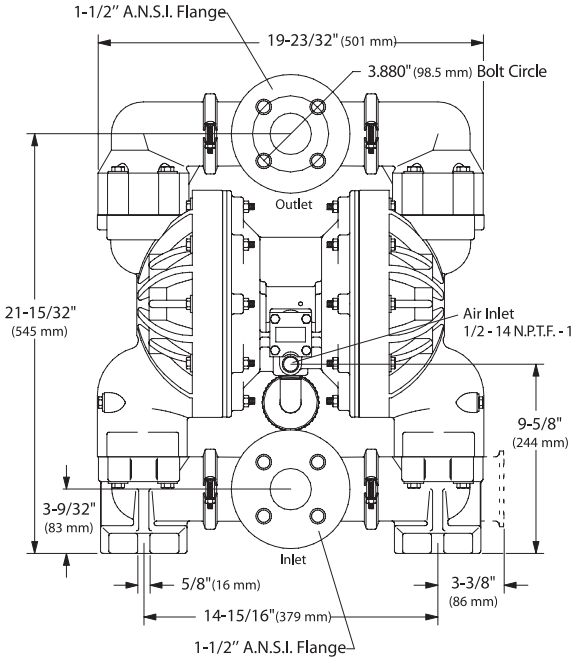

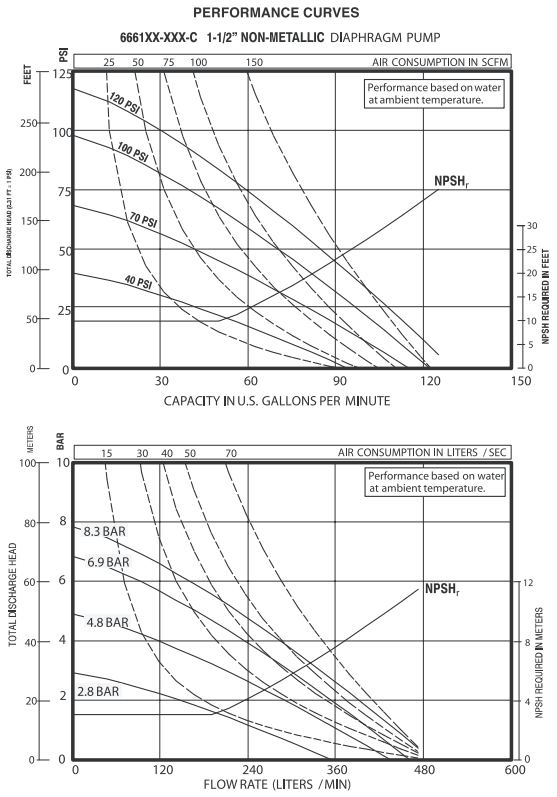

Performance based on an elastomeric fitted pump, flooded suction with water at ambient conditions. Due to varying materials of construction, assembly configurations and operating conditions, published data is for reference only.

HANLEY CONTROLS
CLONMEL
www.hccl.ie

2″ Non-Metallic Models

PRO SERIES PUMPS

ARO® PRO 2″ non-metallic pumps achieve flow rates of up to 145 GPM (548.8 LPM) and offer a wide array of material and porting configurations. 2″ non-metallic pumps are often used for transfer, filling, recirculation and batching in Chemical, Industrial and Water/Wastewater treatment markets.

Ratio:	1:1
Maximum Flow gpm (lpm):	145 (548.8)
Displacement per cycle gal (l):	.72 (2.7)
Air Inlet (Female):	1/2 - 14 NPTF - 1
Fluid Inlet/Outlet:	2″ ANSI Center Flange
Max. operating pressure psi (bar):	120 (8.3)
Suspended solids max. dia in (mm):	.25 (6.4)
Weight lbs (kg):	6662A3-X-C 62 (28.1) Note: Add 23 (10.4) for cast iron air motor section
Maximum dry suction lift ft (m):	14 (4.27)
Sound Level:	70 PSI 60 Cycles/Min 77.7 db(A)

6662A3-333-C

Ordering

Position	1	2		3	4	5		6
Example:	6662X	X	-	X	X	X	-	C

Position 1 Center Body	Position 2 Fluid Caps Manifold Material	Position 3 Seat Material	Position 4 Ball Check Material	Position 5 Diaphragm Material
A - Aluminum B - Cast Iron	3 - Polypropylene Flange (3-piece manifold) 4 - P.V.D.F. (Kynar)	2 - 316 Stainless Steel 3 - Polypropylene 4 - P.V.D.F. (Kynar) 8 - 440 Stainless Steel	1 - Neoprene 2 - Nitrile 3 - Viton® 4 - PTFE 8 - Polyurethane C - Hytrel® E - Santoprene®	1 - Neoprene 2 - Nitrile 3 - Viton® 4 - PTFE / Santoprene 9 - Hytrel® B - Santoprene®

Hytrel® is a registered trademark of DuPont company, Santoprene® is registered trademark of Monsanto and Viton® is a registered trademark of ExxonMobil

Accessories

Air Line Connection Kit | 66084-1
(Piggyback Filter/Regulator with gauge, pipe nipple and 5-foot air hose)
Service Repair Kits | 637118-C (air section)
637165-XX (fluid section)
Flange Connection Kit | 67080 Kit meets ANSI specifications. Flange constructed of glass-filled polypropylene. Bolts, washers and nuts are stainless steel. Gasket is 4401 klinger synthetic fiber nitrile binder.

Flange Connection Kit

2" Non-Metallic Dimensions and Flow Charts

All dimensions are given in inches and millimeters (mm).

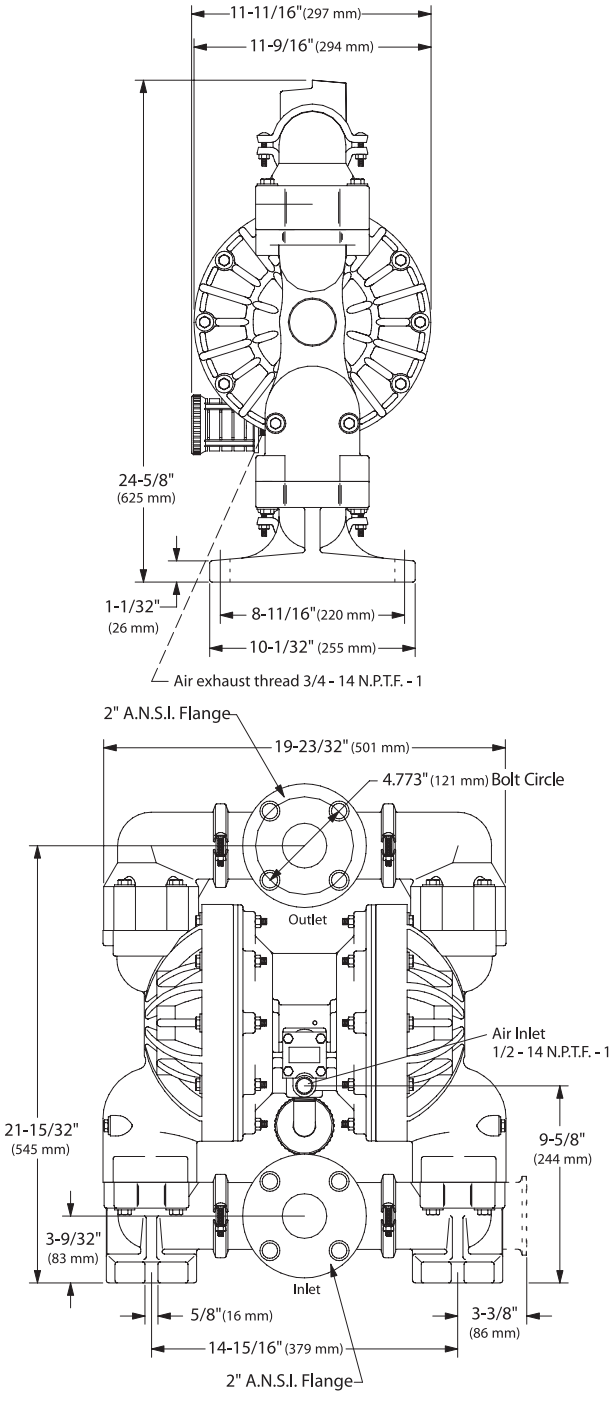

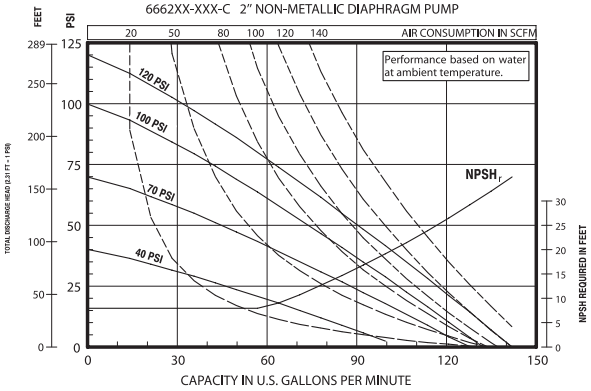

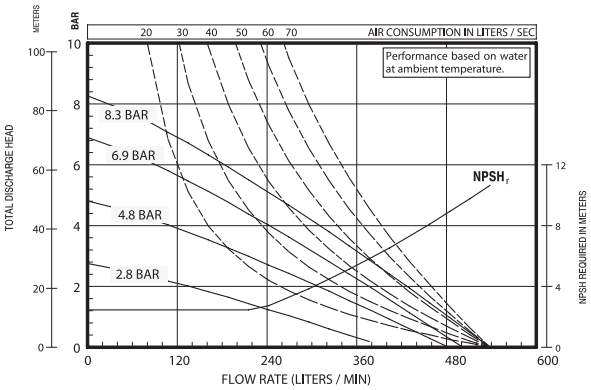

Performance based on an elastomeric fitted pump, flooded suction with water at ambient conditions. Due to varying materials of construction, assembly configurations and operating conditions, published data is for reference only.

HANLEY CONTROLS
CLONMEL
www.hccl.ie

Metallic Models

The ARO® range of diaphragm pumps offers many materials of construction compatible for the chemical industry: Our metallic offering consists of aluminium, cast iron, stainless steel and hastelloy.

HANLEY CONTROLS
CLONMEL
www.hccl.ie

Model Overview: Metallic Models

MODEL	1/2"	3/4"	3/4"	1"	1-1/2"	2"	3"
Maximum Flow GPM (LPM)	12 (45.4)	13.6 (51.5)	33 (125)	35 (133)	90 (340.7)	172 (651)	237 (897)
Maximum Discharge Pressure PSI (BAR)	100 (6.9)	100 (6.9)	120 (8.3)	120 (8.3)	120 (8.3)	120 (8.3)	120 (8.3)
Fluid Ports Inlet/Outlet (BSP Available)	1/2 - 14 NPTF -1 Rp (1/2 - 14 BSP)	3/4 - 14 NPTF.-2 Rp 3/4(3/4-14BSP, parallel)	3/4 - 14 NPTF 1 (3/4 - 14 BSP)	1 - 11-1/2 NPTF - 1 Rp 1 (1-11 BSP parallel)	1-1/2 11-1/2 NPTF - 1 Rp 1-1/2 (1-11 BSP parallel)	1-1/2 11-1/2 NPTF - 1 Rp /2 (2-11 BSP parallel)	3 - 8 NPTF - 1 Rp 3 (3 - 11 BSP parallel)
Materials of Construction	Aluminum Stainless Steel	Aluminum	Aluminum	Aluminum Stainless Steel Cast Iron	Aluminum Stainless Steel Cast Iron	Aluminum Stainless Steel Cast Iron	Aluminum Stainless Steel Cast Iron
Pump Weight Lbs. (Kg.)	10.4 (4.7) PD05A-XAS-X-B 16.6 (7.5) PD05A-XSS-X-B 8.0 (3.7) PD05R-XAS-X-B 14.3 (6.5) PD05R-XSS-X-B	8.74 (3.96)	17.5 (7.94)	19 (8.6) Aluminum* 29 (13.1) Stainless 31 (14.1) Cast Iron* *add 8-lb(3.63-kg) for cast iron center section	51.5 (23.4) Aluminum* 77.5 (35.2) Stainless 79.5 (36.1) Cast Iron* *add 23-lb(10.4-kg) for cast iron center section	65.2 (29.6) 129.9 (58.9) 124.3 (56.4)	109.8 (49.8) 222.2 (100.8) 213.1 (96.7)
Maximum Solids Inches (mm)	3/32 (2.4)	3/32 (2.4)	1/8 (3.2)	1/8 (3.2)	1/4 (6.4)	1/4 (6.4)	3/8 (9.5)
Best Selling Models (BSP Available)	PD05A-AAS-FAA-B PD05A-AAS-FCC-B PD05A-AAS-FGG-B PD05A-AAS-FTT-B PD05A-ASS-STT-B PD05R-AAS-PGG-B PD05R-AAS-PTT-B PD05R-ASS-STT	PD07R-AAS-FAA PD07R-AAS-FCC PD07R-AAS-FTT PD07R-AAS-PCC PD07R-AAS-PTT	666070-122-C 666070-244-C 666070-322-C 666070-344-C 666070-361-C 666070-361-C 666070-3EB-C 666070-244-C	666100-122-C 666100-244-C 666100-322-C 666100-344-C 666100-361-C 666100-361-C 666100-3EB-C 666101-244-C	666150-244-C 666150-322-C 666150-362-C 666150-3EB-C 666151-244-C 666152-281-C 666152-2EB-C 66616B-2EB-C	666250-144-C 666250-444-C 666250-9C9-C 666250-EEB-C 666250-G22-C 666251-EEB-C	666300-144-C 666300-9C9-C 666300-EEB-C 666300-G22-C 666302-EEB-C
Recommended Filter/ Regulator	P39124-600	P39124-600	P39224-600	P39224--600	P39334-600	P39354-600	P39454-610
Air Line Kit	66073-1	66073-1	66073-2	66073-2	66084-1	66312	66109

Compact Series *PRO Series*

1/2" Metallic Models

COMPACT SERIES PUMPS

Part of our Compact Series of pumps, our 1/2" metallic pumps feature big performance in a small package. With flow rates up to 14.4 GPM (54.5 LPM) and a wide range of material and porting configurations.

Ratio:	1:1
Maximum Flow gpm (lpm):	12.0 (45.4)
Displacement per cycle gal (l):	.039 (.15)
Air Inlet (Female):	1/4 - 18 PTF SAE Short (PD05R-X-X-B models) 1/4 - 18 NPTF - 1 (PD05A-X-X-B models)
Fluid Inlet/Outlet:	1/2 - 14 NPTF - 1 Rp 1/2 (1/2 - 14 BSP, parallel)
Max. operating pressure psi (bar):	100 (6.9)
Suspended solids max. dia in (mm):	.09375 (2.4)
Weight lbs (kg):	PD05A-XAS-XXX-B 10.4 (4.7) PD05A-XSS-XXX-B 16.6 (7.5) PD05R-XAS-XXX-B 8.0 (3.7) PD05R-XSS-XXX-B 14.3 (6.5)
Maximum dry suction lift ft (m):	15 (4.5)
Sound Level:	70 PSI 60 Cycles/Min 75 db(A)
Muffler:	PD05A - 93110; PD05R - Integral

PD05A-ASS-FAA-B

PD05R-ASS-PTT-B

Ordering

Position	1	2		3	4	5		6	7	8		9		10	11
Example:	PX05	X	-	X	X	S	-	X	X	X	-	B	-	X	X

Position 1 Model Series	Position 2 Center Section	Position 3 Connections	Position 4 Manifold Material	Position 5 Hardware	Positon 6 Seat Material	Position 7 Ball Material	Position 8 Diaphragm Material	Position 9 Specialty Code
D - Standard E - Remote Actuation Capable	A - Aluminum R - Polypropylene	A - 1/2 - 14 NPTF - 1 B - Rp 1/2 (1/2 - 14 BSP, parallel)	A - Aluminum S - Stainless Steel	S - Stainless Steel	F - Aluminum P - Poly-propylene S - Stainless Steel	A - Santoprene® C - Hytrel® G - Nitrile S - Stainless Steel T - PTFE U - Polyurethane V - Viton®	A - Santoprene® C - Hytre®l G - Nitrile L - Long-Life PTFE T - PTFE/ Santoprene U - Polyurethane V - Viton®	Revision Level **Position 10 & 11 Specialty Code** Fluid control options for pump with electronic interface (PE05 model). See complete description on page 27

Hytrel® is a registered trademark of DuPont company, Santoprene® is registered trademark of Monsanto and Viton® is a registered trademark of ExxonMobil

Accessories

Air Line Connection Kit | 66073-1
(Piggyback Filter/Regulator with gauge, pipe nipple and 5-foot air hose)
Wall Mount Bracket Kit | 76763
Optional Muffler | 93110 used with 637438 kit
Service Repair Kits | 637428 (air section)
637427-XX (fluid section)

Air Line Connection Kit
66073-1

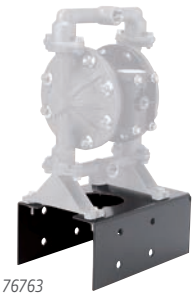

76763

1/2" Metallic Dimensions and Flow Charts

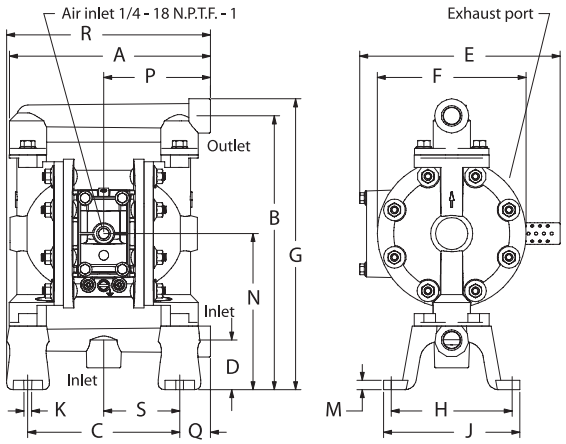

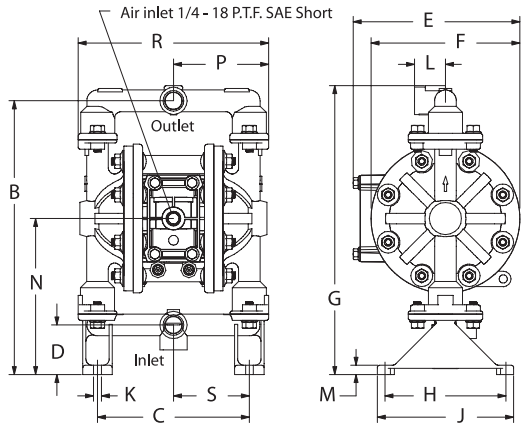

DIMENSIONS

A	8-1/8" (206.0 mm)	G	see below	N	6-5/16" (159.9 mm)
B	11-1/16" (280.4 mm)	H	4-7/8" (123.8 mm)	P	see below
C	6-1/8" (155.6 mm)	J	5-1/2" (139.7 mm)	Q	1-1/4" (31.6 mm)
D	2" (50.8 mm)	K	5/16" (8.0 mm)	R	see below
E	see below	L	1-1/4" (31.8 mm)	S	3-1/16" (77.8 mm)
F	6" (152.4 mm)	M	3/8" (9.5 mm)		

Dimension	PD05A-XXS-XXX-B	PD05R-XXS-XXX-B
"E"	8-3/32" (205.5 mm)	6-23/32" (170.6 mm)
"G"	11-3/4" (297.9 mm)	11-21/32" (296.0 mm)
"P"	4-5/16" (109.3 mm)	3-27/32" (97.4 mm)
"R"	8-7/32" (208.5 mm)	7-11/16" (194.9 mm)

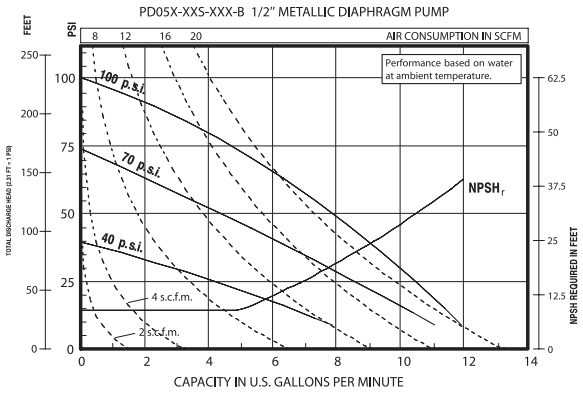

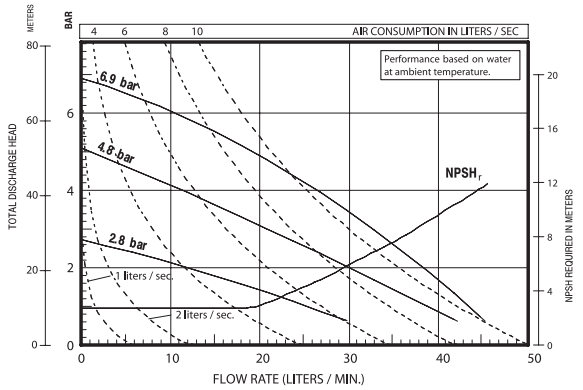

Performance based on an elastomeric fitted pump, flooded suction with water at ambient conditions. Due to varying materials of construction, assembly configurations and operating conditions, published data is for reference only.

Ordering Position 9

Specialty Code 1
(Blank if no Specialty Code)

A - Solenoid 120VAC

B - Solenoid 12VDC

C - Solenoid 240VAC

D - Solenoid 24VDC

E - 12vDC NEC/CEC

F - 24vDC NEC/CEC

G - Solenoid 12VDC ATEX/IECex

H - Solenoid 24VDC ATEX/IECex

J - 120VAC NEC/CEC

K - Solenoid 220VAC ATEX/IECex

N - Solenoid with no coil

0 - Standard Valve Block (No Solenoid)

Ordering Position 10 and 11
Specialty Code 2
(Blank if no Specialty Code)

E - End of stroke feedback + Leak Detection

F - End of stroke feedback

G - End of Stroke ATEX/IECex/NEC/CEC

H - End of Stroke/Leak Detection ATEX/IECex/NEC/CEC

L - Leak Detection

M - Leak Detection ATEX/IECex/NEC/CEC

0 - No Option

3/4" Metallic Models

COMPACT SERIES PUMPS

Part of our Compact Series of pumps our 3/4" metallic pumps feature big performance in a small package. With flow rates up to 14.8 GPM (56 LPM) and a wide range of material and porting configurations.

Ratio:	1:1
Maximum Flow gpm (lpm):	13.6 (51.5)
Displacement per cycle gal (l):	.030 (.11)
Air Inlet (Female):	1/4 - 18 PTF SAE Short
Fluid Inlet/Outlet:	3/4 - 14 NPTF-2
	Rp 3/4 (3/4 -14 BSP, parallel)
Max. operating pressure psi (bar):	100 (6.9)
Suspended solids max. dia in (mm):	.09375 (2.4)
Weight lbs (kg):	PX07R 8.74 (3.96)
	PX07A 11.0 (4.99)
Maximum dry suction lift ft (m):	15 (4.5)
Sound Level:	70 PSI 60 Cycles/Min 75 db(A)

PD07R-AAS-FAA

Ordering

Position	1	2		3	4	5		6	7	8		9		10	11
Example:	PX07	R	-	X	X	S	-	X	X	X	-	B	-	X	X

Position 1 Model Series	Position 2 Center Section	Position 3 Connections	Position 4 Manifold Material	Position 5 Hardware	Positon 6 Seat Material	Position 7 Ball Material	Position 8 Diaphragm Material	Position 9 Specialty Code
D - Standard Pump E - Remote Actuation Capable	A - Aluminum R - Poly-propylene	A - 3/4 - 14 NPTF-2 B - Rp 3/4 (3/4 -14 BSP, parallel)	A - Aluminum	S - SS	F - Aluminum P - Polypropylene	A - Santoprene® C - Hytrel® T - PTFE	A - Santoprene® C - Hytrel® L - Long-Life PTFE T - PTFE	Revision Level **Position 10 & 11 Specialty Code** Fluid control options for pump with electronic interface (PE07 model). See complete description on page 29

Hytrel® is a registered trademark of DuPont company, Santoprene® is registered trademark of Monsanto and Viton® is a registered trademark of ExxonMobil

Accessories

Air Line Connection Kit | 66073-1
(Piggyback Filter/Regulator with gauge, pipe nipple and 5-foot air hose)
Wall Mount Bracket Kit | 76763
Optional Muffler | 93110 used with 637438 kit
Service Repair Kits | 637428 (air section)
637427-XX (fluid section)

Air Line Connection Kit 66073-1

3/4" Metallic Dimensions and Flow Charts

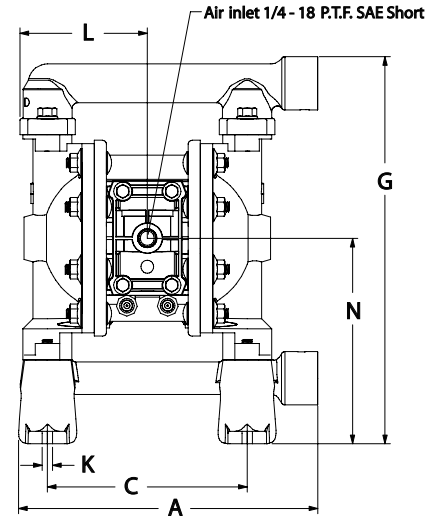

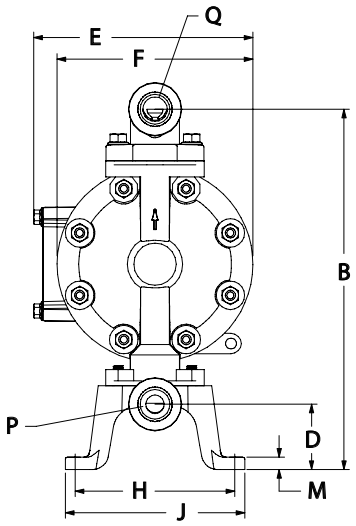

DIMENSIONS

A - 9-9/32"(235.3mm)	F - 6" (152.4 mm)	L - 3-29/32"(99.2mm)
B - 11-1/16"(280.4mm)	G - 11-7/8" (301.2 mm)	M -3/8" (9.5mm)
C - 6-1/8"(155.6mm)	H - 4-29/32"(124.2 mm)	N - 6-5/16"(159.8mm)
D - 2" (50.8mm)	J - 5-1/2"(139.7mm)	
E - 6-23/32" (170.6mm)	K - 5/16"(8.0 mm)	

Model	"P" Material Inlet	"Q" Material Outlet
PD07R-AAS-PXX	3/4- 14 N.P.T.F. - 2	3/4- 14 N.P.T.F. - 2
PD07R-BAS-PXX	Rp 3/4(3/4- 14 BSP)	Rp 3/4(3/4- 14 BSP)

NOTE: Dimensions are shown in inches and (mm) and are supplied for reference only

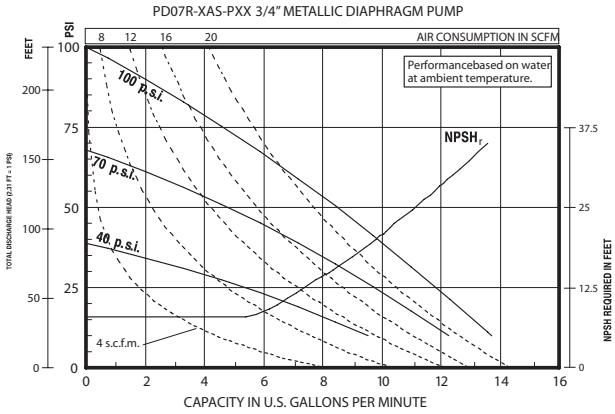

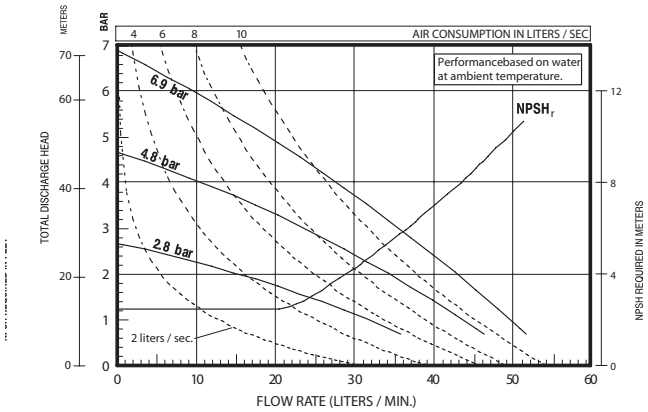

Performance based on an elastomeric fitted pump, flooded suction with water at ambient conditions. Due to varying materials of construction, assembly configurations and operating conditions, published data is for reference only.

Ordering Position 10

Specialty Code 1
(Blank if no Specialty Code)

A - Solenoid 120VAC
B - Solenoid 12VDC
C - Solenoid 240VAC
D - Solenoid 24VDC
E - 12vDC NEC/CEC
F - 24vDC NEC/CEC
G - Solenoid 12VDC ATEX/IECex
H - Solenoid 24VDC ATEX/IECex
J - 120VAC NEC/CEC
K - Solenoid 220VAC ATEX/IECex
N - Solenoid with no coil
0 - Standard Valve Block (No Solenoid)

Ordering Position 11
Specialty Code 2
(Blank if no Specialty Code)

E - End of stroke feedback + Leak Detection
F - End of stroke feedback
G - End of Stroke ATEX/IECex/NEC/CEC
H - End of Stroke/Leak Detection ATEX/IECex/NEC/CEC
L - Leak Detection
M - Leak Detection ATEX/IECex/NEC/CEC
0 - No Option

HANLEY CONTROLS
CLONMEL
www.hccl.ie

3/4" Metallic Models

COMPACT SERIES PUMPS

ARO® PRO Series 3/4" metallic diaphragm pumps achieve flow rates of up to 33 GPM (125 LPM) and offer a wide array of material and porting configurations. These pumps are often used for transfer, filling, recirculation and batching in Industrial, Mining, Construction, Chemical and Petrochemical markets.

Ratio:	1:1
Maximum Flow gpm (lpm):	33 (125)
Displacement per cycle gal (l):	.15 (.57)
Air Inlet (Female):	1/4 - 18 NPTF - 1
Fluid Inlet/Outlet:	3/4 - 14 NPTF - 1 Rp 3/4 (3/4 - 14 BSP, parallel)
Max. operating pressure psi (bar):	120 (8.3)
Suspended solids max. dia in (mm):	.125 (3.2)
Weight lbs (kg):	666070-1EB-A (aluminum) 17.5 (7.9)
Maximum dry suction lift ft (m):	17 (5.2)
Sound Level:	70 PSI 60 Cycles/Min 78.3 db(A)

66607X-XXX
Aluminum Pump

Ordering

Position		1		2	3	4		5
Example:	6660	XX	-	X	X	X	-	A

Position 1 Center Section Material/Fluid Connection/ Wetted Parts Material/Hardware Material	Position 2 Seat Material	Position 3 Ball Check Material	Position 4 Diaphragm Material
70 - Aluminum Center Section / NPTF Thread / Aluminum Wetted Parts, Single Manifold / Steel Hardware 80 - Aluminum Center Section / BSP Thread / Aluminum Wetted Parts, Single Manifold / Steel Hardware 7A - Aluminum Center Section / NPTF Thread / Aluminum Wetted Parts, Single Manifold / Stainless Steel Hardware 8A - Aluminum Center Section / BSP Thread / Aluminum Wetted Parts, Single Manifold / Stainless Steel Hardware	1 - Aluminum 2 - 316 Stainless Steel 3 - Polypropylene 4 - PVDF (Kynar) 5 - Carbon Steel 8 - Hard 400 Stainless Steel	1 - Neoprene 2 - Nitrile 3 - Viton® 4 - PTFE 6 - Acetal 8 - Polyurethane A - Stainless Steel C - Hytrel® E - Santoprene®	1 - Neoprene 2 - Nitrile 3 - Viton® 4 - PTFE / Santoprene 9 - Hytrel® B - Santoprene®

Hytrel® is a registered trademark of DuPont company, Santoprene® is registered trademark of Monsanto and Viton® is a registered trademark of ExxonMobil

Accessories

Air Line Connection Kit | 66073-2 (Piggyback Filter/Regulator with gauge, pipe nipple and 5-foot air hose)
Service Repair Kits | 637118-C (air section)
637119-XX-C (fluid section)
Wall Mount | 66100

Air Line Connection Kit
66073-2

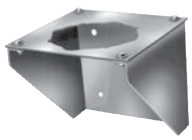

Wall Mount
66100

3/4" Metallic Dimensions and Flow Charts

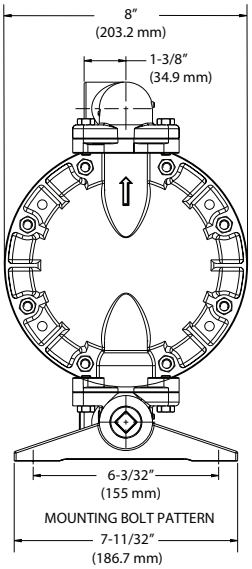

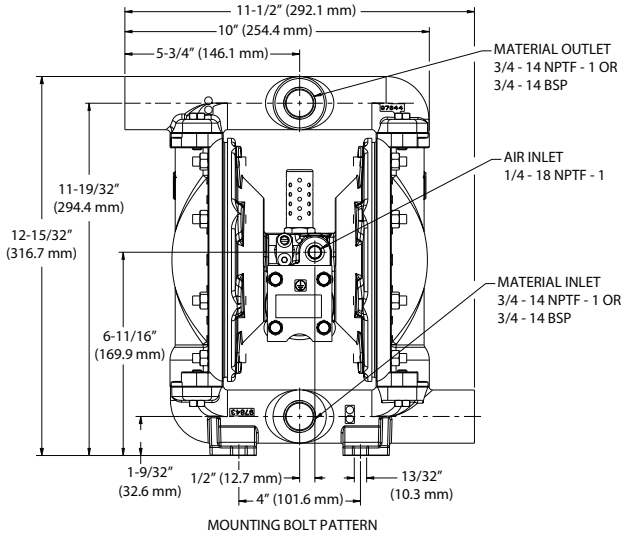

(Dimensions shown are for reference only, they are displayed in inches and millimeters (mm)).

66607X-XXX -A 3/4"Metallic Diaphragm Pump

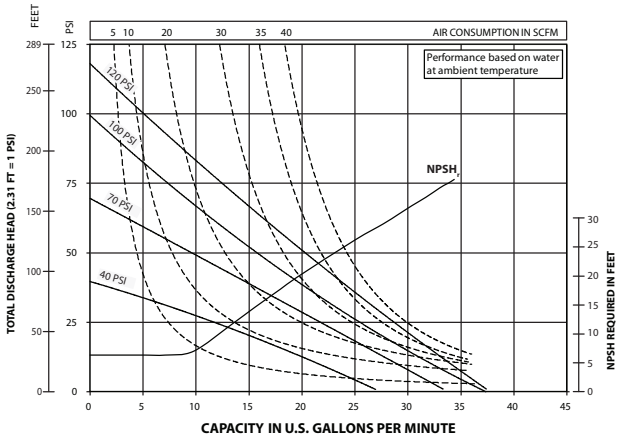

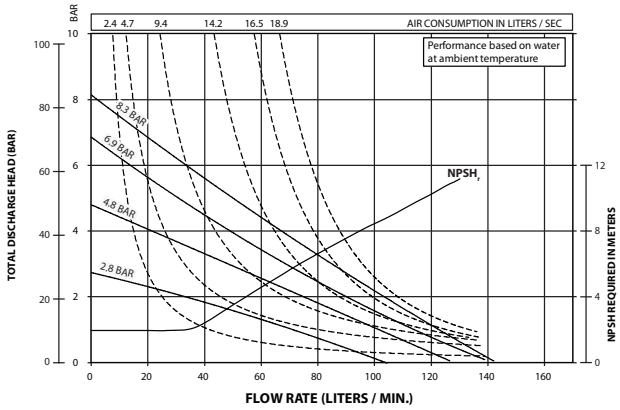

Performance based on an elastomeric fitted pump, flooded suction with water at ambient conditions. Due to varying materials of construction, assembly configurations and operating conditions, published data is for reference only.

HANLEY CONTROLS
CLONMEL
www.hccl.ie

1″ Metallic Models

PRO SERIES PUMPS

ARO® PRO 1″ metallic diaphragm pumps achieve flow rates of up to 35 GPM (133 LPM) and offer a wide array of material and porting configurations. These pumps are often used for transfer, filling, recirculation and batching in Industrial, Mining, Construction, Chemical and Petrochemical markets.

Ratio:	1:1
Maximum Flow gpm (lpm):	35 (133)
Displacement per cycle gal (l):	.16 (.60)
Air Inlet (Female):	1/4 - 18 NPTF - 1
Fluid Inlet/Outlet:	1 - 11-1/2 NPTF - 1 Rp 1 (1-11 BSP parallel)
Max. operating pressure psi (bar):	120 (8.3)
Suspended solids max. dia in (mm):	.125 (3.2)
Weight lbs (kg):	666100-X-C (aluminum) 19 (8.6) 666101-X-C (stainless steel) 29 (13.1) 666102-X-C (cast iron) 31 (14.1) Note: Add 8 (3.63) for cast iron air motor section
Maximum dry suction lift ft (m):	20 (6.1)
Sound Level:	70 PSI 60 Cycles/Min 64.5 db(A)

6661X0, 1XA, 1X2 & 1XC Aluminum / Cast Iron Pump

6661X1 & 1XB Stainless Steel Pump

Ordering

Position	1	2		3	4	5		6
Example:	6661X	X	-	X	X	X	-	C

Position 1 Center Body	Position 2 Fluid Caps Manifold Material	Position 3 Seat Material	Position 4 Ball Check Material	Position 5 Diaphragm Material
0 - Aluminum, NPTF 1 - Cast Iron, NPTF 2 - Aluminum, BSP 3 - Cast Iron, BSP	0 - Aluminum (steel hardware) 1 - SS (steel hardware) 2 - Cast Iron (steel hardware) 9 - SS, dual outlet (steel hardware) A - Aluminum, (stainless hardware) B - SS (stainless hardware) C - Cast Iron (stainless hardware) D - SS, dual outlet (stainless hardware)	1 - Aluminum 2 - 316 Stainless Steel 3 - Polypropylene 4 - PVDF (Kynar) 5 - Carbon Steel 8 - Hard 400 Stainless Steel	1 - Neoprene 2 - Nitrile 3 - Viton® 4 - PTFE 6 - Acetal 8 - Polyurethane A - Stainless Steel C - Hytrel® E - Santoprene®	1 - Neoprene 2 - Nitrile 3 - Viton® 4 - PTFE / Santoprene 9 - Hytrel® B - Santoprene® G - Nitrile

Hytrel® is a registered trademark of DuPont company, Santoprene® is registered trademark of Monsanto and Viton® is a registered trademark of ExxonMobil

Accessories

Air Line Connection Kit | 66073-2 (Piggyback Filter/Regulator with gauge, pipe nipple and 5-foot air hose)

Service Repair Kits | 637118-C (air section)
637119-XX-C (fluid section)

Wall Mount | 66100

Air Line Connection Kit 66073-2

Wall Mount 66100

1" Metallic Dimensions and Flow Charts

6661X0, 1XA, 1X2 & 1XC

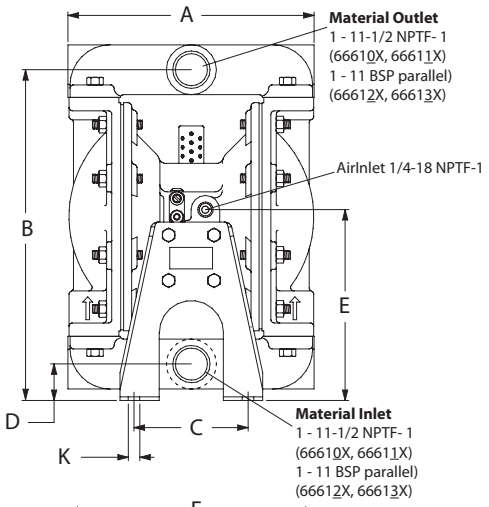

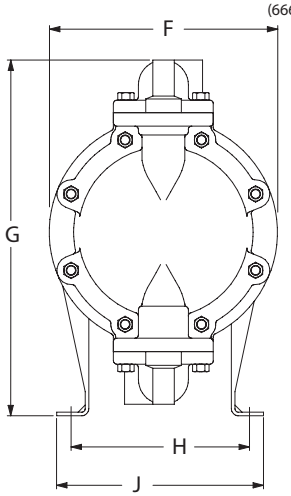

6661X1, & 1XB

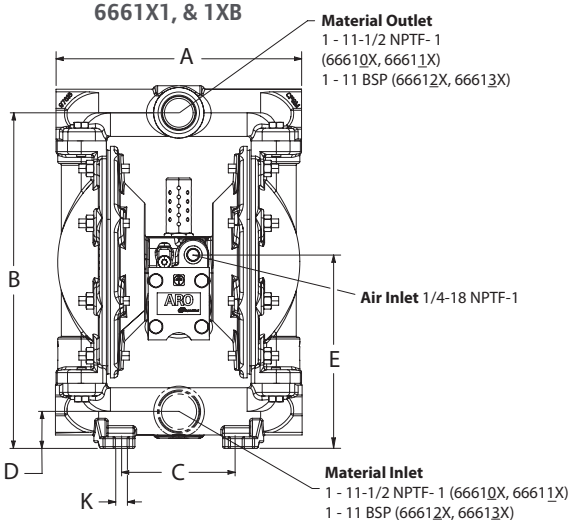

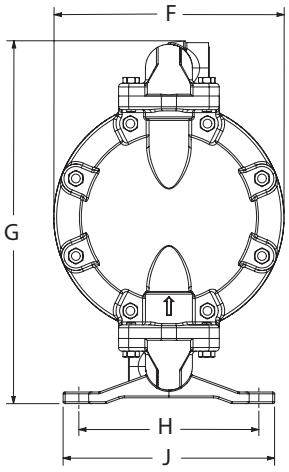

DIMENSIONS

A - 8-9/16" (217.5 mm)	E - 6-1/2" (165 mm)	H - 6-1/4" (159 mm)
B - 11-9/16" (294 mm)	F - 8" (203 mm)	J - 7-5/16" (186 mm)
C - 4" (102 mm)	G - 12-1/2" (318 mm)	K - 13/32" (10 mm)
D - 1-1/4" (32 mm)		

NOTE: Dimensions are shown in inches and (mm), supplied for reference only and are typically rounded up to the nearest 1/16 inch.

DIMENSIONS

A - 8-9/16" (217.5 mm)	E - 6-1/2" (165 mm)	H - 6-1/8" (155 mm)
B - 11-9/16" (294 mm)	F - 8" (203 mm)	J - 7-5/16" (186 mm)
C - 4" (102 mm)	G - 12-7/16" (315 mm)	K - 13/32" (10 mm)
D - 1-1/4" (32 mm)		

NOTE: Dimensions are shown in inches and (mm), supplied for reference only and are typically rounded up to the nearest 1/16 inch.

PERFORMANCE CURVES

6661XX-XXX-C 1" METALLIC DIAPHRAGM PUMP

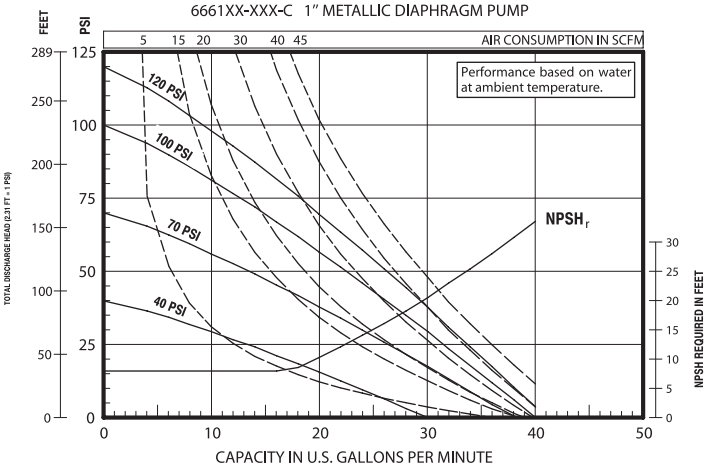

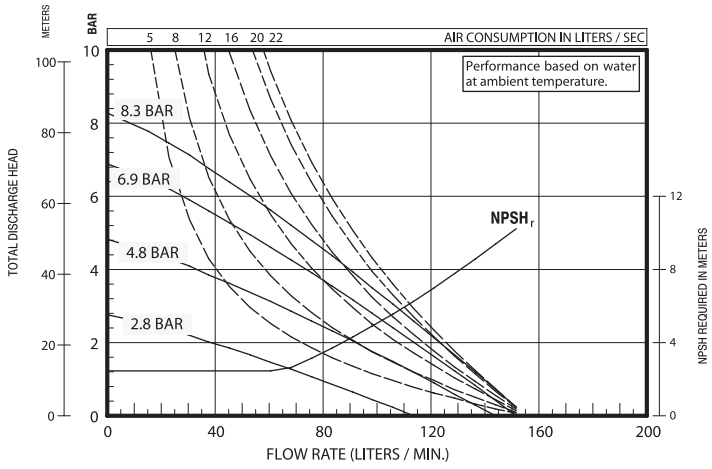

Performance based on an elastomeric fitted pump, flooded suction with water at ambient conditions. Due to varying materials of construction, assembly configurations and operating conditions, published data is for reference only.

1-1/2" Metallic Models

PRO SERIES PUMPS

ARO® PRO 1-1/2" metallic diaphragm pumps achieve flow rates of up to 90 GPM (340.7 LPM) and offer a wide array of material and porting configurations. These pumps are often used for transfer, filling, recirculation and batching in Paint, Oil & Gas, Mining, Construction, Chemical and Petrochemical markets.

Ratio:	1:1
Maximum Flow gpm (lpm):	90 (340.7)
Displacement per cycle gal (l):	.64 (2.42)
Air Inlet (Female):	1/2 - 14 NPTF - 1
Fluid Inlet/Outlet:	1-1/2 11-1/2 NPTF - 1 Rp 1-1/2 (1-1/2 - 11 BSP parallel)
Max. operating pressure psi (bar):	120 (8.3)
Suspended solids max. dia in (mm):	.25 (6.4)
Weight lbs (kg):	666150-X-C (aluminum) 51.5 (23.4) 666151-X-C (stainless steel) 77.5 (35.2) 666152-X-C (cast iron) 79.5 (36.1) Note: Add 23 (10.4) for cast iron air motor section
Maximum dry suction lift ft (m):	19 (5.8)
Sound Level:	70 PSI 60 Cycles/Min 80.5 db(A)

6661X0, 1X2, 1XA, & 1XC Aluminum / Cast Iron Pump

6661X1 & 1XB Stainless Steel Pump

Ordering

Position	1	2		3	4	5		6
Example:	6661X	X	-	X	X	X	-	C

Position 1 Center Body	Position 2 Fluid Caps Manifold Material	Position 3 Seat Material	Position 4 Ball Check Material	Position 5 Diaphragm Material
5 - Aluminum, NPTF 6 - Cast Iron, NPTF 7 - Aluminum, BSP 8 - Cast Iron, BSP	0 - Aluminum (steel hardware) 1 - Stainless Steel (steel hardware) 2 - Cast Iron (steel hardware) A - Aluminum, (stainless hardware) B - Stainless Steel (stainless hardware) C - Cast Iron (stainless hardware)	1 - Aluminum 2 - 316 Stainless Steel 3 - Polypropylene 4 - PVDF (Kynar) 5 - Carbon Steel 8 - Hard 400 Stainless Steel	1 - Neoprene 2 - Nitrile 3 - Viton® 4 - PTFE 6 - Acetal 8 - Polyurethane A - Stainless Steel C - Hytrel® E - Santoprene®	1 - Neoprene 2 - Nitrile 3 - Viton® 4 - PTFE / Santoprene 9 - Hytrel® B - Santoprene®

Hytrel® is a registered trademark of DuPont company, Santoprene® is registered trademark of Monsanto and Viton® is a registered trademark of ExxonMobil

Accessories

Air Line Connection Kit* | 66084-1 (Piggyback Filter/Regulator with gauge, pipe nipple and 5-foot air hose)

Service Repair Kits | 637118-C (air section)
637124-XX (fluid section)

Wall Mount | 62133

1-1/2" Metallic Dimensions and Flow Charts

6661X0, 1X2, 1XA, & 1XC

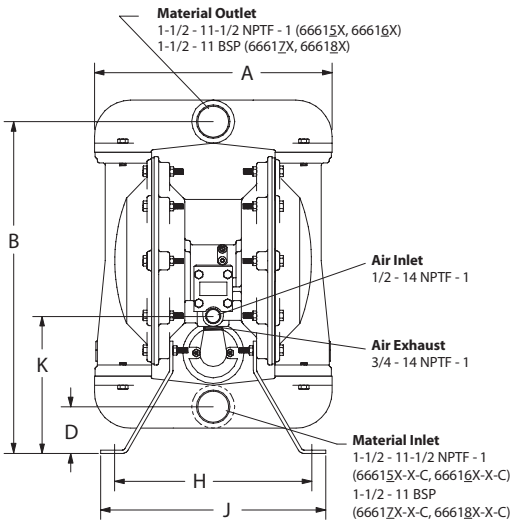

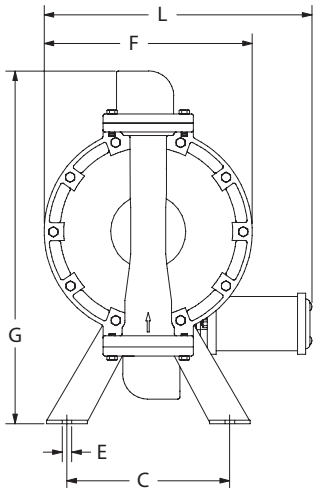

DIMENSIONS

A - 13-1/8" (333 mm)	E - 1/2" (14 mm)	J - 12" (305 mm)
B - 18-3/8" (467 mm)	F - 11-1/2" (292 mm)	K - 7-5/8" (194 mm)
C - 9" (229 mm)	G - 19-5/8" (498 mm)	L - 14-13/16" (376 mm)
D - 2-3/4" (70 mm)	H - 10-3/4" (273 mm)	

NOTE: Dimensions are shown in inches and (mm), supplied for reference only and are typically rounded up to the nearest 1/16 inch.

6661X1 & 1XB

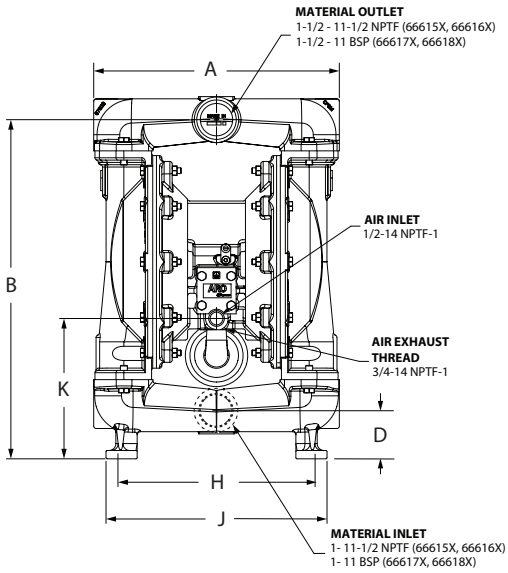

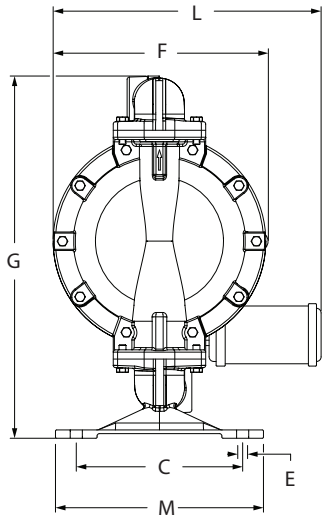

DIMENSIONS

A - 13-5/16" (337 mm)	E - 17/32" (13.5 mm)	J - 12" (305 mm)
B - 18-3/8" (467 mm)	F - 11-1/2" (292 mm)	K - 7-5/8" (194 mm)
C - 9" (229 mm)	G - 19-5/8" (498 mm)	L - 14-1/2" (368 mm)
D - 2-3/4" (70 mm)	H - 10-3/4" (273 mm)	M - 11-1/4" (286 mm)

NOTE: Dimensions are shown in inches and (mm), supplied for reference only and are typically rounded up to the nearest 1/16 inch.

PERFORMANCE CURVES

6661XX-XXX-C 1-1/2" METALLIC DIAPHRAGM PUMP

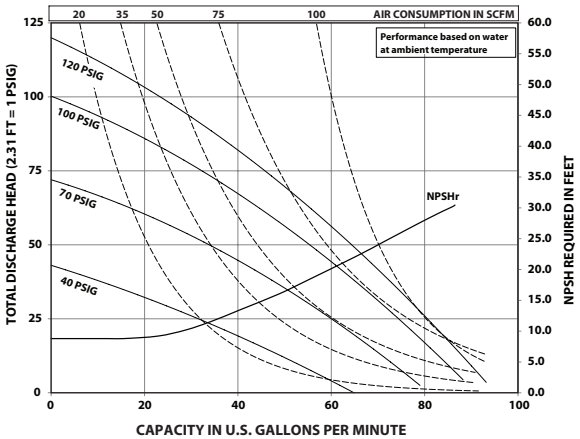

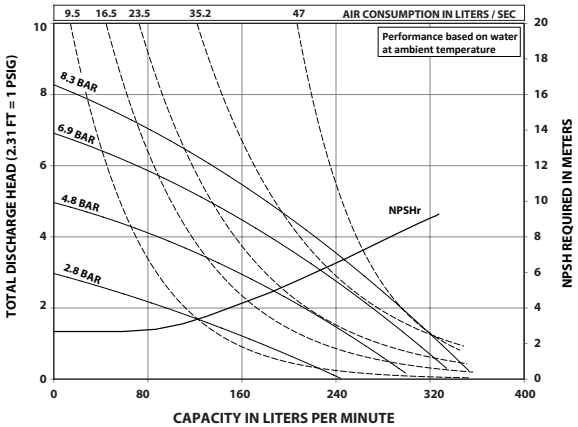

Performance based on an elastomeric fitted pump, flooded suction with water at ambient conditions. Due to varying materials of construction, assembly configurations and operating conditions, published data is for reference only.

HANLEY CONTROLS
CLONMEL
www.hccl.ie

2″ Metallic Models

PRO SERIES PUMPS

ARO® PRO 2″ metallic pumps achieve flow rates of up to 172 GPM (651 LPM) and offer a wide array of material and porting configurations. These pumps are often used for transfer, filling, recirculation and batching in Ceramic, Paint, Oil and Gas, Mining, Construction, Chemical and Petrochemical markets.

Ratio:	1:1	
Maximum Flow gpm (lpm):	172 (651)	
Displacement per cycle gal (l):	1.4 (5.3)	
Air Inlet (Female):	3/4 - 14 NPTF - 2	
Fluid Inlet/Outlet:	2 - 11-1/2 NPTF - 1	
	Rp 2 (2 - 11 BSP, parallel)	
Max. operating pressure psi (bar):	120 (8.3)	
Suspended solids max. dia in (mm):	.25 (6.4)	
Weight lbs (kg):	6662X0-XXX-C	65.2 (29.6)
	6662X1-XXX-C	129.9 (58.9)
	6662X2-XXX-C	124.3 (58.9)
Maximum dry suction lift ft (m):	27.2 (8.3)	
Sound Level:	70 PSI 60 Cycles/Min	85.3 db(A)

666252-244-C

67389 Muffler Kit (not shown) included with pump

Ordering

Position	1	2		3	4	5		6
Example:	6662X	X	-	X	X	X	-	C

Position 1 Center Body	Position 2 Fluid Caps Manifold Material	Position 3 Seat Material	Position 4 Ball Check Material	Position 5 Diaphragm Material
5 - Aluminum, NPTF 7 - Aluminum, BSP	0 - Aluminum (steel hardware) 1 - Stainless steel (steel hardware) 2 - Cast Iron (steel hardware) A - Aluminum / Stainless Steel B - Stainless Steel / Stainless Steel C - Cast Iron / Stainless Steel	1 - Aluminum 2 - 316 Stainless Steel 4 - PVDF (Kynar) 5 - Carbon Steel 8 - Hard Stainless Steel 9 - Hytrel E - Santoprene G - Nitrile	2 - Nitrile 4 - PTFE A - 316 Stainless Steel C - Hytrel® E - Santoprene®	2 - Nitrile 4 - PTFE / Santoprene 9 - Hytrel® B - Santoprene® G - Nitrile

Hytrel® is a registered trademark of DuPont company, Santoprene® is registered trademark of Monsanto and Viton® is a registered trademark of ExxonMobil

Accessories

Air Line Connection Kit | 66312
(Piggyback Filter/Regulator with gauge, pipe nipple and 5-foot air hose)
Service Repair Kits | 637434 (air section)
637432-XX (fluid section)

2" Metallic Dimensions and Flow Charts

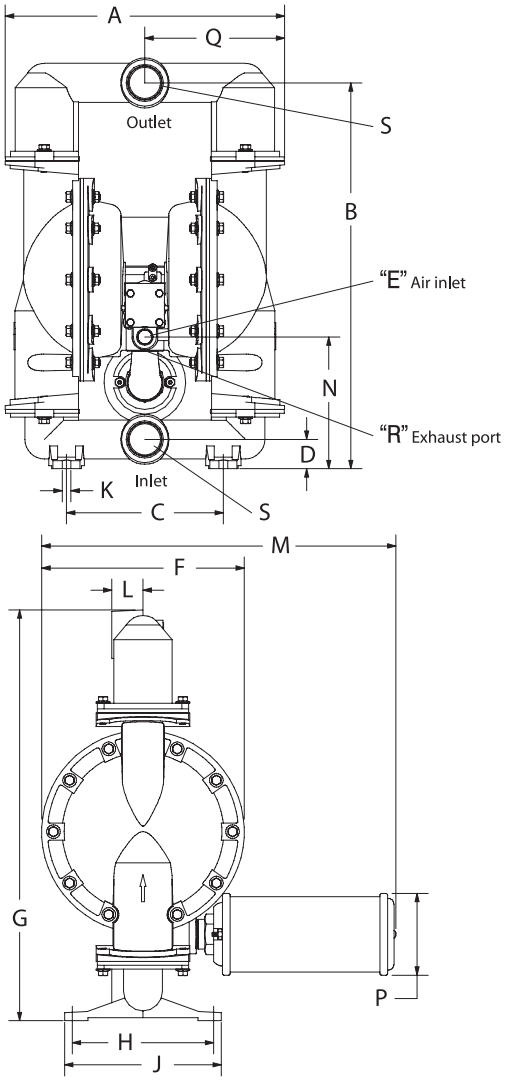

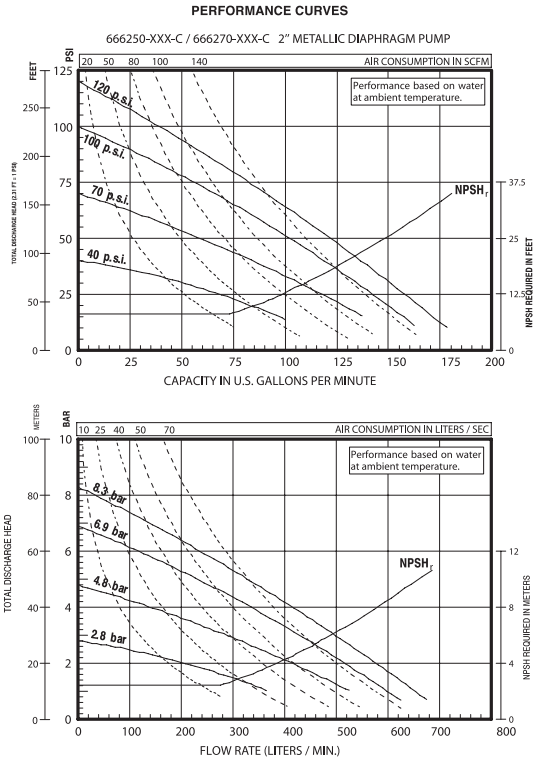

Performance based on an elastomeric fitted pump, flooded suction with water at ambient conditions. Due to varying materials of construction, assembly configurations and operating conditions, published data is for reference only.

DIMENSIONS

A 17-15/16" (455.1 mm)	G 26-3/8" (669.5 mm)	N 8-15/32" (214.6 mm)
B 24-3/4" (628.7 mm)	H 9-1/16" (230.2 mm)	P 5-1/4" (133.4 mm)
C 10-1/16" (255.6 mm)	J 10-1/16" (255.6 mm)	Q 8-13/32" (227.6 mm)
D 1-7/8" (47.6 mm)	K 9/16" (14.3 mm)	R 1-1/4 - 11-1/2N.P.T.F.-1
E 3/4 - 14 N.P.T.F. - 1	L 2" (50.8 mm)	S (see below)
F 13" (330.2 mm)	M 22-3/4" (577.3 mm)	

"S" Inlet / Outlet

66625-XXX-C 2 - 11-1/2 N.P.T.F. - 1
66627-XXX-C Rp 2 (2 - 11 BSP parallel)

NOTE: Dimensions are shown in inches and (mm), supplied for reference only and are typically rounded up to the nearest 1/16 inch.

HANLEY CONTROLS
CLONMEL
www.hccl.ie

3″ Metallic Models

PRO SERIES PUMPS

ARO® PRO 3″ metallic diaphragm pumps achieve flow rates of up to 237 GPM (897 LPM) and offer a wide array of material and porting configurations. These pumps are often used for transfer, filling, recirculation and batching in Ceramic, Paint, Oil & Gas, Mining, Construction, Chemical and Petrochemical markets.

Ratio:	1:1
Maximum Flow gpm (lpm):	237 (897)
Displacement per cycle gal (l):	2.65 (10.03)
Air Inlet (Female):	3/4 - 14 NPTF - 2
Fluid Inlet/Outlet:	3 - 8 NPTF - 1
	Rp 3 (3 - 11 BSP parallel)
Max. operating pressure psi (bar):	120 (8.3)
Suspended solids max. dia in (mm):	.375 (9.5)
Weight lbs (kg):	6663X0-XXX-C 109.8 (49.8)
	6663X1-XXX-C 222.2 (100.8)
	6663X2-XXX-C 213.1 (96.7)
Maximum dry suction lift ft (m):	17.6 (5.4)
Sound Level:	70 PSI 60 Cycles/Min 86.3 db(A)

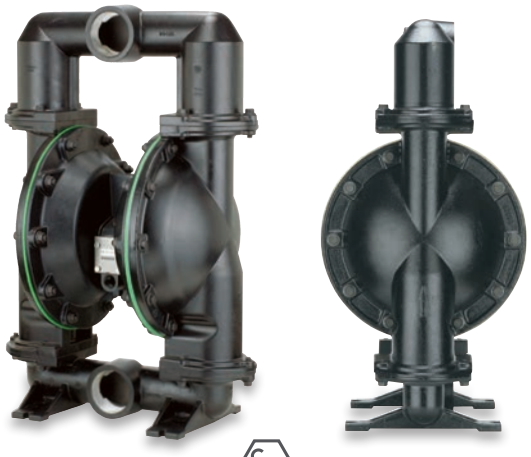

666322-144-C

67389 Muffler Kit (not shown) included with pump

Ordering

Position	1	2		3	4	5		6
Example:	6663X	X	-	X	X	X	-	C

Position 1 Center Body	Position 2 Fluid Caps Manifold Material	Position 3 Seat Material	Position 4 Ball Check Material	Position 5 Diaphragm Material
0 - Aluminum, NPTF 2 - Aluminum, BSP	0 - Aluminum (steel hardware) 1 - Stainless steel (steel hardware) 2 - Cast Iron (steel hardware) A - Aluminum / Stainless Steel B - Stainless Steel / Stainless Steel C - Cast Iron / Stainless Steel	1 - Aluminum 9 - Hytrel® E - Santoprene® G - Nitrile 2 - 316 Stainless Steel 4 - PVDF (Kynar) 5 - Carbon Steel 8 - Hard Stainless Steel	2 - Nitrile 4 - PTFE C - Hytrel® E - Santoprene®	2 - Nitrile 4 - PTFE / Santoprene 9 - Hytrel® B - Santoprene®

Hytrel® is a registered trademark of DuPont company, Santoprene® is registered trademark of Monsanto and Viton® is a registered trademark of ExxonMobil

Accessories

Air Line Connection Kit | 66312 (Piggyback Filter/Regulator with gauge, pipe nipple and 5-foot air hose)

Service Repair Kits | 637434 (air section)
637433-XX (fluid section)

3" Metallic Dimensions and Flow Charts

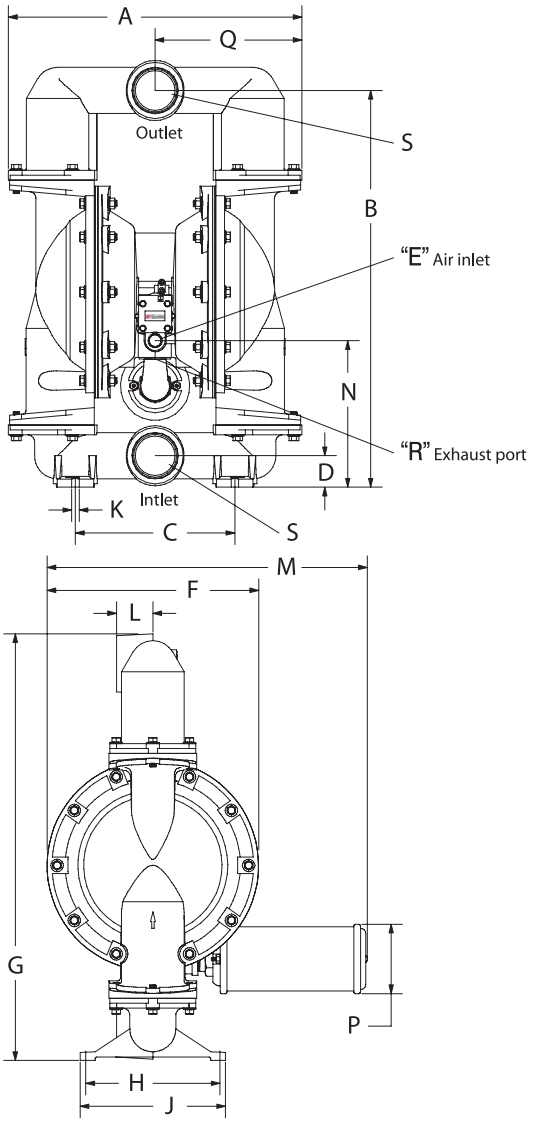

PERFORMANCE CURVES

666300-XXX-C / 666320-XXX-C 3" METALLIC DIAPHRAGM PUMP

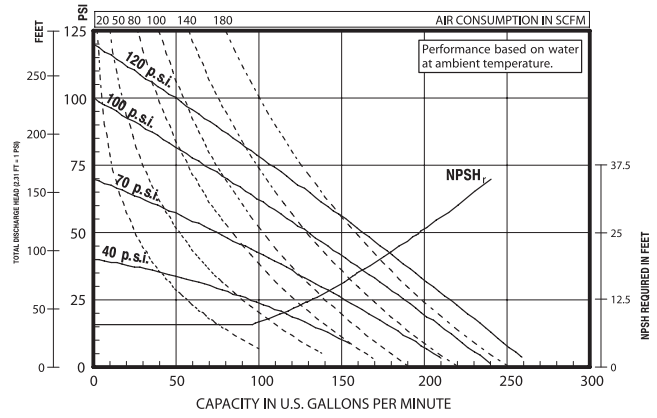

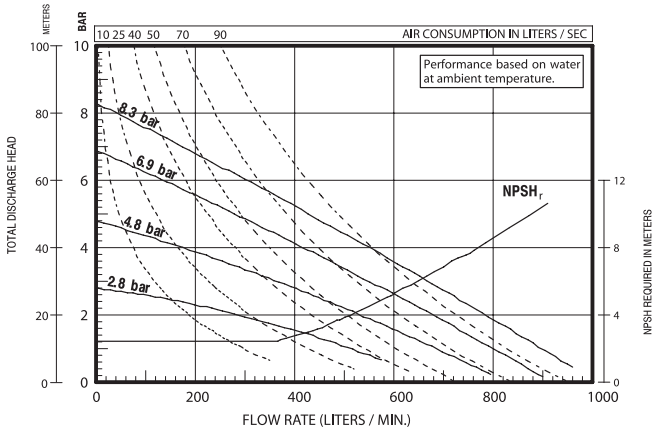

Performance based on an elastomeric fitted pump, flooded suction with water at ambient conditions. Due to varying materials of construction, assembly configurations and operating conditions, published data is for reference only.

DIMENSIONS

A 22-7/32" (563.9 mm)	G 32-9/32" (819.8 mm)	N 11-3/32" (281.4 mm)
B 30" (762.0 mm)	H 10-5/32" (258.0 mm)	P 5-1/4" (133.4 mm)
C 12-1/16" (306.4 mm)	J 11" (279.4 mm)	Q 11-1/8" (281.9 mm)
D 2-3/8" (60.3 mm)	K 9/16" (14.3 mm)	R 1-1/4 - 11-1/2N.P.T.F.-1
E 3/4 - 14 N.P.T.F. - 1	L 2-3/4" (69.9 mm)	S (see below)
F 16" (406.4 mm)	M 24-7/16" (620.7 mm)	

"S" Inlet / Outlet	
66630-XXX-C	3 - 8 N.P.T.F. - 1
66632-XXX-C	Rp 3 (3 - 11 BSP parallel)

HANLEY CONTROLS
CLONMEL
www.hccl.ie

3:1 Ratio High Pressure Diaphragm Pump

SPECIALTY PUMP

ARO's pneumatic 3:1 ratio, high pressure diaphragm pumps provide effective flow rates up to 24 gpm (90.7 lpm) at pressures up to 300 psi (20.4 bar). The compact size and footprint makes this a smart choice for a wide variety of markets and OEM's. This pump is useful for feeding filter presses, the transfer of paint, recirculation and high solid coatings, inks, adhesives, filled material, drilling grout, caulking, solvent reclamation and resins.

Ratio:	3:1
Maximum Flow gpm (lpm):	26 (98.4) flooded inlet
	12 (45.6) at 125 psi back pressure
Displacement per cycle gal (l):	.06-Gallons (.23)
Air Inlet (Female):	3/8 - 18 NPTF - 1
Fluid Inlet:	1 - 11-1/2 NPTF - 1
	Rp 1 (1- 11 BSP parallel)
Fluid Outlet:	1 - 11-1/2 NPTF - 1
	Rp 1 (1- 11 BSP parallel)
Max. operating pressure psi (bar):	100 (6.9)
Suspended solids max. dia in (mm):	.125 (3.2)
Weight lbs (kg):	94.73 (42.97)
Maximum dry suction lift ft (m):	5-6 (1.5-1.8)
Sound Level:	70 PSI 60 Cycles/Min 84.5 db(A)

PH10A-ASS-SST

Ordering

Position	1	2		3	4	5		6	7
Example:	PH10	A	-	X	S	S	-	XX	T

Position 1 Base Model	Position 2 Center Section	Position 3 Port Size	Position 4 Wetted Parts	Position 5 Hardware	Position 6 Seat/Ball Check Material	Position 7 Diaphragm Material
1" Pump	A - Aluminum	A - NPTF Threads B - BSP Threads	S - Stainless Steel	S - Stainless Steel	HH - 440 SS/ 440 SS SS - 316 SS / 316 SS	T - PTFE

Accessories

Air Line Filter-Regulator | P39344-614
Piggyback unit with a 5 micron filter, metal bowl with auto drain, sight glass and 0-125-psi gauge.

Service Repair Kits | 637338 (air section)
637339 (PH10X-XXX-XSX fluid section)
637339-1 (PH10X-XXX-XHX fluid section)

Wall Mount Bracket | 67142

Wall Mount Bracket
67142

High Pressure Diaphragm Pump Dimensions and Flow Charts

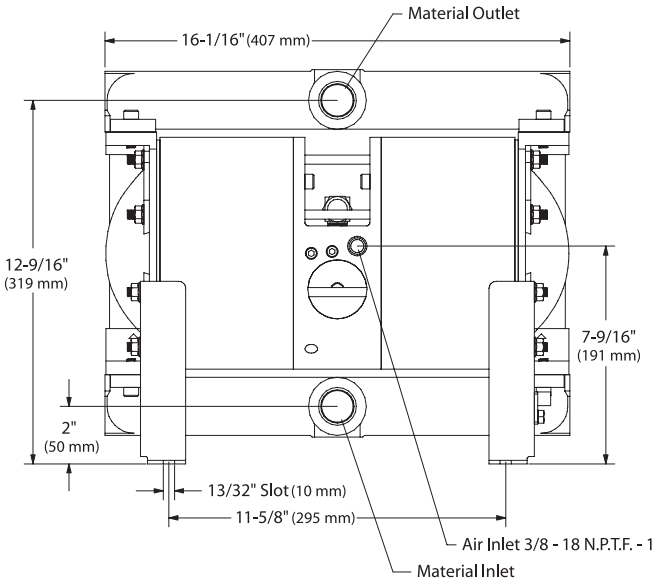

	Material Inlet	Material Outlet
PH10A-ASS-XXT	1 - 11-1/2 N.P.T.F. - 1	1 - 11-1/2 N.P.T.F. - 1
PH10A-BSS-XXT	Rp 1 (1 - 11 BSP parallel)	Rp 1 (1 - 11 BSP parallel)

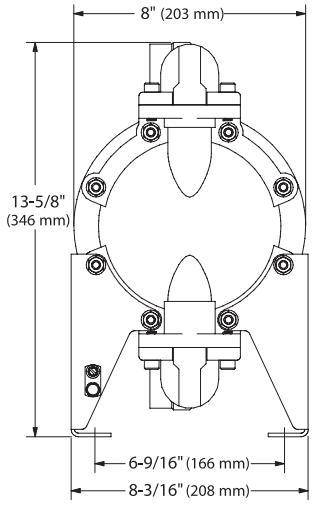

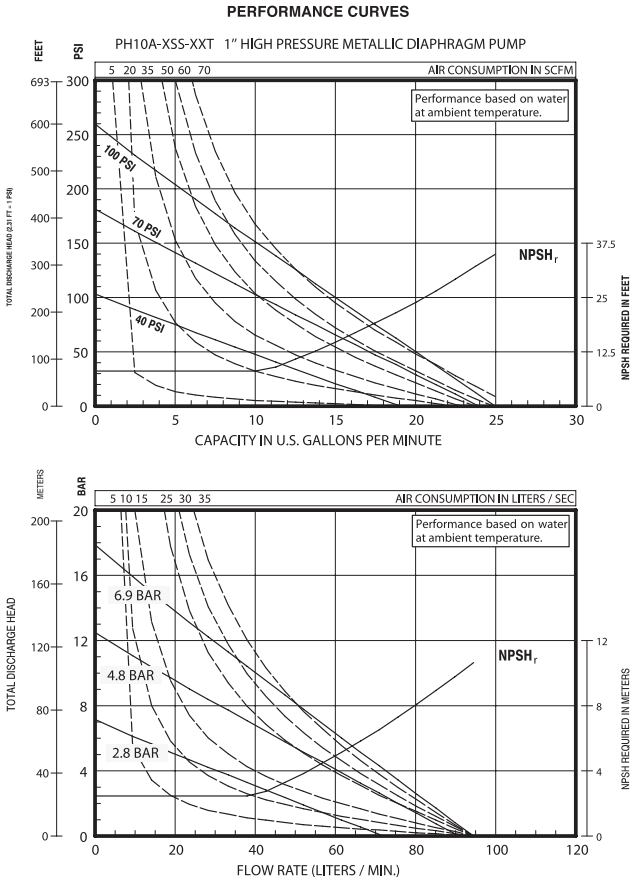

Performance based on an elastomeric fitted pump, flooded suction with water at ambient conditions. Due to varying materials of construction, assembly configurations and operating conditions, published data is for reference only.

Pit Boss Diaphragm Pumps

SPECIALTY PUMP

When you purchase an ARO® Pit Boss pneumatic diaphragm pump, you can be confident that you're getting industry-proven durability, reliability, and value. They're the ideal solution for general transfer, dewatering, and solids-handling applications.

- Comfort-grip handles
- Removable screened inlet
- One-way exhaust check valve - Permits submersible operation

PIT BOSS DEWATERING PUMP	1-1/2"	2"	3"
Max flow-gpm (L/min)	80 (302.8)	156 (590.5)	217 (821.3)
Max discharge pressure-psi (bar)	120 (8.3)	120 (8.3)	120 (8.3)
Max particle size-inches (mm)	0.5 (12.7)	0.75 (19.0)	1 (25.4)
Pump weight-lb (kg)	55 (25)	74 (34)	118 (54)
Fluid ports	1.5" NPTF and BSP (female)	2" NPTF and BSP (female)	3" NPTF and BSP (female)

Ordering

Position	1	2	3		3	4	5		
Example:	66M	XX	0	-	1	X	X	-	C

Position 1 Base Model	Position 2 Center Body/ Fluid Connection	Position 3 Fluid cap, Manifold, Mat'l Hardware Material	Position 4 Seat Material	Position 5 Ball Material	Position 6 Diaphragm Material
66M	15 - Aluminum / 1-1/2" NPTF 17 - Aluminum / 1-1/2" BSP 25 - Aluminum / 2" NPTF 27 - Aluminum / 2" BSP 30 - Aluminum / 3" NPTF 32 - Aluminum / 3" BSP	0 - Aluminum / Carbon Steel	1 - Aluminum	2 - Nitrile C - Hytrel® E - Santoprene®	2 - Nitrile 9 - Hytrel® B - Santoprene®

Hytrel® is a registered trademark of DuPont company, Santoprene® is registered trademark of Monsanto and Viton® is a registered trademark of ExxonMobil

Accessories

	1-1/2"	2"	3"
Filter / regulator	P39344-614	P39354-614	P39454-614
Air section service kit	637118-C	637434	637434
Fluid section service kit	637469-XX	637468-XX	637467-XX
Muffler kit	67463	67389	67389

HANLEY CONTROLS
CLONMEL
www.hccl.ie

Automatic DeWatering System

SPECIALTY PUMP

Air Operated Control Solution with Liquid Level Sensing

The ARO® Automatic Dewatering System offers automatic on/off controls for Pro and EXP diaphragm pumps. A pneumatically controlled Liquid Level Sensor is used to easily control the fluid level within a desired range. The Automatic Dewatering System will limit the monitoring labor and reduce air consumption by avoiding dry running of the pump.

- Simple design is easy to setup and use
- All pneumatic operation eliminates electrical ignition source
- High/Low level control maintains fluid between established levels
- Reduces air consumption by avoiding pump dry running
- Portable system with directly mounted liquid level sensor

SPECIFICATIONS

Temperature Range- °F (°C)	32 – 122 (0 - 50)
Air Supply Pressure- psi (bar)	29 - 101 (2-7)
Weight w/o Pump lbs (kg)	11 (4.8)
Air Connection Size	Rc 3/4"
Sensing Tube lengths - ft (m)	66 (20)
Sensitivity to detect liquid level- in (cm)	2 - 4 (5-10)

SERVICE KITS

SS-BQG550	Mounting Bracket
PNCV-1/2	Pneumatic Controlled Valve
637523	Sensing Tube and Screen Kit

1. *Bracket*
2. *Liquid Level Sensor*
3. *Pneumatic Controlled Valve*
4. *Sensing Tubes with Screen*
5. *Pro Series Diaphragm Pump (purchase separately)*

AUTOMATIC DEWATERING SYSTEM

SCD501BN08-V1D	Dewatering Kit (without pump)

PUMP COMPATIBILITY

2" PRO Series Pump	6662XX-XXX-C
3" PRO Series Pump	6663XX-XXX-C

Working Principle

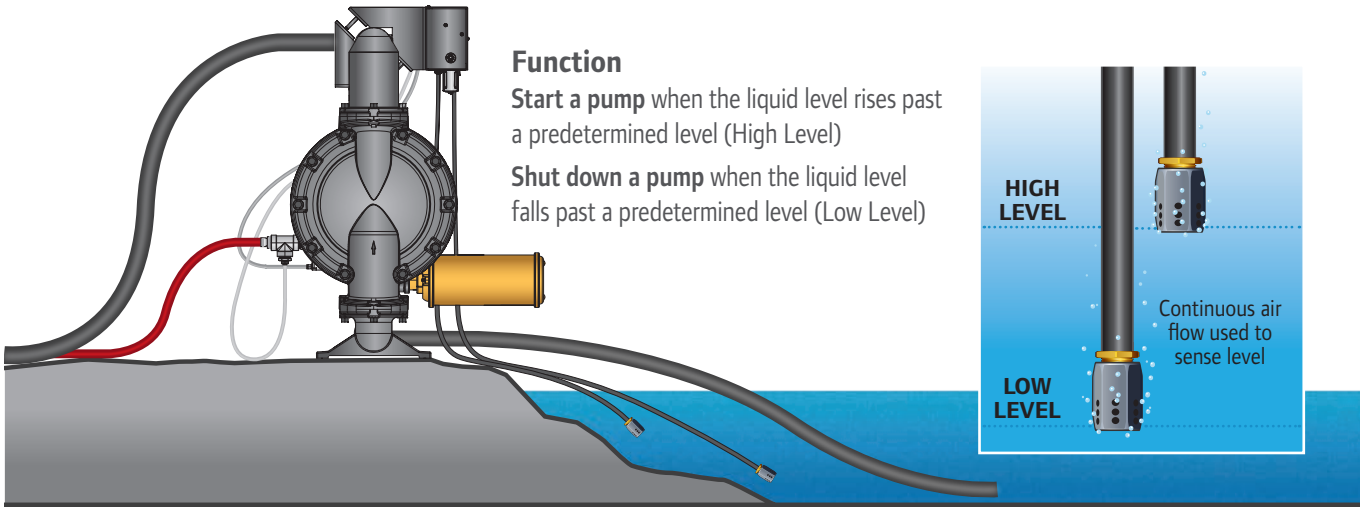

Function

Start a pump when the liquid level rises past a predetermined level (High Level)

Shut down a pump when the liquid level falls past a predetermined level (Low Level)

HANLEY CONTROLS
CLONMEL
www.hccl.ie

Centrifugal Pump Models

SPECIALTY PUMP

ARO's pneumatic centrifugal pumps provide effective flow rates up to 230 gpm (870.5 lpm). Compact in size, these pumps are useful for dewatering trenches, holes, bilges, pits or other bodies of standing water. These pumps are used by municipalities, utilities, mines, ships, construction and industrial sites.

Maximum Flow gpm (lpm):	200 (757) P237AX-EU
	230 (870.5) P35AX-EU
Air Inlet (Female):	3/4 -14 NPT (P237AX-EU)
	1 - 11-1/2 NPT (P35A1-EU)
Fluid Inlet:	Screened Inlet
Fluid Outlet:	2" NPTF P35A1-EU
	2-1/2" NPTF P237A1-EU
	2-1/2" BSP P237A3-EU
Max. operating pressure psi (bar):	90 (6.2)
Air Consumption in CFM:	P237AX-EU 100
	P35A1-EU 160
Suspended solids max. dia in (mm):	.25 (6.4)
Pump Housing Material:	P237AX-EU Cast Iron
	P35A1-EU Cast Iron
Weight lbs (kg):	P237AX-EU 48 (21.8)
	P35A1-EU 79 (36)

Ordering

Position	1		2		
Example:	P237A	-	X	-	EU

Position 1 Model Series	Position 2 Discharge Thread
200-GPM (757-LPM)	1 - 2-1/2" NPT 3 - 2-1/2" BSP

Position	1		2		
Example:	P35A	-	1	-	EU

Position 1 Model Series	Position 2 Discharge Thread
230-GPM (870-LPM)	1 - 2" NPT

Accessories

Air Line Unit | C28453-810 for P237AX-EU
C28463-810 for P35A1-EU
C284X3-810 models contain Filter, Regulator and Lubricator units.

Service Repair Kits | Repair parts are ordered individually.

Refer to Operator's Manuals:
P237AX-EU Pumps: Form P6856
P35A1-EU Pumps: Form P7263

Centrifugal Pump Dimensional Data and Flow Charts

Height: inches (mm)	P237AX-EU	17-5/8 (448)
	P35A1-EU	22-1/2 (570)
Size of opening pump will pass through: inches (mm)		
	P237AX-EU	8-3/4 (222) x 8-3/4 (222)
	P35A1-EU	8-7/16 (214) x 14-1/16 (357)
Discharge Pipe Tap:	P237A1-EU	2-1/2" NPTF
	P237A3-EU	2-1/2" BSP
	P35A1-EU	2" NPTF
Air Inlet Pipe Tap:	P237AX-EU	3/4" NPTF
	P35A1-EU	1" NPTF
Air Inlet Recommended Hose Size: inches (mm)		
	P237AX-EU	3/4 (19)
	P35A1-EU	1 (25.4)
Exhaust Pipe Tap:	P237AX-EU	1-1/4" NPTF
	P35A1-EU	1-1/4" NPTF
Exhaust Recommended Hose Size: inches (mm)		
	P237AX-EU	1-1/4 (31.7)
	P35A1-EU	1-1/4 (31.7)

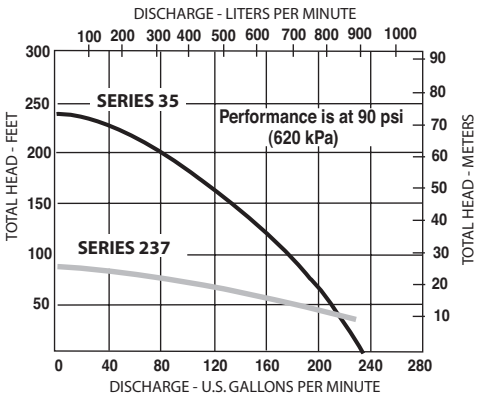

Refer to www.AROzone.com for full size flow curves. For additional information contact technical support at 1.800.495.0276

Fuel, Antifreeze and Calcium Chloride Pumps

SPECIALTY PUMP

U/L Approved Fuel Pump

Model no. 670042, 650717-C, 650718-C, 650719-C

Designed specifically for high volume transfer, bulk-unloading, or fueling applications. These pumps meet UL 79 specification code and are compatible with gasoline, aviation fuel, diesel fuel, fuel oil and kerosene.

Model	Body Material Wetted	Diaphragm/ Ball Material	Air Inlet NPT (F) in (mm)	Fluid Inlet/Outlet Material in (mm)	Max Flow gpm (L/min)
1/2" PORT					
670042	Fuels	Viton/Viton	1/4″ (6.3)	1/2″ (13)	12 (45.4)
1" PORT					
650717-C	Aluminum	Viton / Acetal	1/4″ (6.3)	1″ / 1″ (25.4)	29 (109.8
1-1/2" PORT					
650718-C	Aluminum	Viton / Acetal	1/2″ (127)	1-1/2″ (38.1)	75 (283.9
2" PORT					
650719-C	Aluminum	Viton / Acetal	3/4″ (19.1)	2″ (50.8)	105 (397.5)

Antifreeze / Water Blending Pump

Model no. 650715-C

This 1:1 ratio diaphragm pump is designed for mixing anti-freeze and water in 50 / 50 proportion for automotive coolant systems. It has dual inlets to allow simultaneous pumping and blending of antifreeze and water.

Calcium Chloride Tire-fill Pump Package

Model no. 613201-2-C

Designed for the purpose of evacuating and filling tires with calcium chloride ballast solution. Package includes a 666100-441-C, 1″ port diaphragm pump. Aluminum construction with neoprene diaphragms and PTFE checks for compatibility with corrosive calcium chloride.
Package includes: 10' dispensing hose, 8' supply hose, 40 mesh strainer, control handle and all required clamps and hardware.

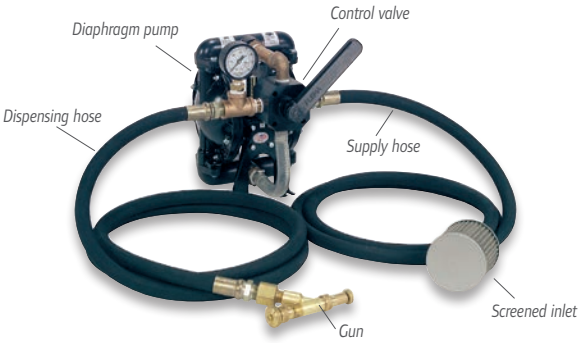

Model	Application	Manifold Material	Diaphragm O-Ring Material	Air Inlet NPT / F in (mm)	Fluid Outlet NPT / F in (mm)	Max gpm (L/min)
1" PORTS						
650715-C	50/50 Mix of Antifreeze and Water	Aluminum	Nitrile	1/4″ (6)	1″ (25.4)	35 (133)
613201-2-C	Calcium Chloride Tire Filling	Aluminum	Neoprene	1/4″ (6)	1″ (25.4)	35 (133)

HANLEY CONTROLS
CLONMEL
www.hccl.ie

Drum Pumps

SPECIALTY PUMP

Drum Pumps

- Choose from Aluminum, Stainless Steel or Polypropylene body construction - ARO® Drum Pumps are available in three body materials for optimum fluid compatibility.

Ratio:	1:1
Maximum Flow gpm (lpm):	11 (41.6)
Displacement per cycle gal (l):	.039 (.15)
Air Inlet (Female):	1/4 -18 NPT
Fluid Inlet:	Siphon Tube for 55-Gallon Drum
Fluid Outlet:	1/2 -14 NPTF - 1
Max. operating pressure psi (bar):	100 (6.8)
Suspended solids max. dia in (mm):	.09375 (2.4)
Shipping Weight lbs (kg):	22 (10) Polypropylene, basic package 26 (11.8) Aluminum, basic package 36 (16.3) Stainless, basic package

Drum Pump Packages

- Package Components Factory-Matched - ARO Drum Pump package components contain pre-specified, matching materials of construction for complete fluid compatibility.
- Choose from Basic to Complete - Drum Pump Packages can be ordered in 3 styles:
- Basic: Pump, Bung Adapter, Air Safety Shut-Off, Siphon Tube, Weather Seal and base
- Complete/Transfer: Basic Pump plus Fluid Hose or Fluid Hose with Non-Drip Nozzle
- Complete/ Dispensing: Basic Pump plus Foot Valve, Hose and Dispensing Nozzle

Pump Features

- 11-g.p.m. Flow Capability - Drum Pumps offer plenty of capacity to satisfy a broad range of transfer application volume demands.
- Stall-Free Operation - ARO Diaphragm Drum Pumps feature a patented "unbalanced" air valve design that avoids stall-out, even under low air-inlet pressures.
- Bolted Construction - ARO Diaphragm Drum Pumps utilize bolted fasteners for leak-tight integrity.
- 5-Year Warranty

Accessories

Air Line Connection Kit | 66073-1

Service Repair Kit | 637458 (air), 637427-XX (fluid), 104255 (for repair of P29122-600 piggyback filter/regulator)

Ordering

Model Number	Pump Housing and Seats	Pump Dia. and Balls	Lock Out Valve (P/N 104253-2)	Foot Valve	10' Hose ASM	Dispense Valve	Fluid Service*
DAB05-PPTT-2-A	POLYPROPYLENE	PTFE	X	-	-	-	ACIDS & CAUSTICS
DAB05-PPCC-2-A	POLYPROPYLENE	HYTREL	X	-	-	-	WATER/COOLANT
DAB05-PPUU-2-A	POLYPROPYLENE	POLYURETHANE	X	-	-	-	WATER/COOLANT
DAB05-PPAA-2-A	POLYPROPYLENE	SANTOPRENE	X	-	-	-	MILD ACIDS & BASES
DAB05-PPCC-2-N	POLYPROPYLENE	HYTREL	X	-	NITRILE	-	WATER/COOLANT
DAB05-PPCC-B-M	POLYPROPYLENE	HYTREL	X	X	NITRILE	NO-DRIP	WATER/COOLANT
DAB05-PPAA-2-B	POLYPROPYLENE	SANTOPRENE	X	-	EPDM	-	MILD ACIDS & BASES
DAB05-PPUU-2-C	POLYPROPYLENE	POLYURETHANE	X	-	VINYL	-	WATER/COOLANT
DAB05-PPCC-B-J	POLYPROPYLENE	HYTREL	X	X	REINFORCED NITRILE	X	WATER/COOLANT
DAB05-PPAA-B-K	POLYPROPYLENE	SANTOPRENE	X	X	EPDM	X	MILD ACIDS & BASES
DAB05-SSTT-2-A	STAINLESS STEEL	PTFE	X	-	-	-	SOLVENT
DAB05-ASTT-2-A	ALUM./SS.	PTFE	X	-	-	-	SOLVENT
DAB05-APCC-2-A	ALUM./POLY.	HYTREL	X	-	-	-	OIL/SOME SOLVENTS
DAB05-APCC-2-O	ALUM./POLY.	HYTREL	X	-	NITRILE	-	OIL/SOME SOLVENTS
DAB05-APCC-B-P	ALUM./POLY.	HYTREL	X	X	NITRILE	NO-DRIP	OIL/SOME SOLVENTS
DAB05-APCC-B-L	ALUM./POLY.	HYTREL	X	X	REINFORCED NITRILE	X	OIL/SOME SOLVENTS
DAB05-ASAA-2-A	ALUM./S.S.	SANTOPRENE	X	-	-	-	WATER/COOLANT

** Consult ARO Chemical Compatibility Guide to select proper pump construction*

Accessories

Air Filter/Regulator

- The ARO-FLO Series units have the potential to extend the life of air operated equipment while reducing operating costs. These units efficiently remove solid particles from compressed air lines - making them the great choice for large flow applications.

P39224-614

P39124-600

Piggyback Filter/Regulator, Metal Bowl w/ Sight Glass, Auto Drain

Pump Size	NPT Model Number	Port Size	Max Inlet Pressure (psi)	Pressure Range (psi)	Max CFM	Micron Element	Size HxWxD (inches)
1/4" to 3/4"	P39124-624	1/4"	250	0-140	47	5	6.9 x 2.9 x 2.9
1"	P39224-614	1/4"	250	0-140	72	5	9.0 x 2.2 x 3.2
1-1/2"	P39344-614	1/2"	250	0-140	172	5	10.9 x 2.8 x 3.2
2"	P39354-614	3/4"	250	0-140	173	5	10.9 x 2.8 x 3.2
3″	P39454-614	3/4"	250	0-140	236	5	14.7 x 3.5 x 4.1

Piggyback Filter/Regualtor, Poly Bowl w/Guard, Manual Drain

Pump Size	NPT Model Number	Port Size	Max Inlet Pressure (psi)	Pressure Range (psi)	Max CFM	Micron Element	Size HxWxD (inches)
1/4" to 3/4"	P39124-600	1/4"	150	0-140	47	5	6.2 x 2.9 x 2.9
1"	P39224-600	1/4"	150	0-140	72	5	8.1 x 2.2 x 3.2
1-1/2"	P39344-600	1/2"	150	0-140	172	5	10.0 x 2.8 x 3.2
2"	P39354-600	3/4"	150	0-140	173	5	10.9 x 2.8 x 3.2

Cautions of the Use of Polycarbonate Plastic Bowls - Use Only with Compressed Air. Filters and lubricators with polycarbonate plastic bowls are specifically designed for compressed air service, and their use with any other fluid (liquid or gas) is a misapplication. Avoid Harmful Substances. Some compressor oils, chemical cleaners, solvents, paints, and fumes will attack plastic bowls and can cause bowl failure. Do not use with or near these materials. Consult the factory with any questions.

ATEX

Ingersoll Rand attests that ARO-Flo Series of filters, regulators, lubricators (1000, 1500, 2000, 3000 Series) and select accessories are out of scope for ATEX Directive 94/9/EEC or 2014/34/EU. The products listed in IRITS-1215-197 certificate can be used in group II, category 2 environment; Gas and Dust with temperature a T6 (Ex II 2GD T6) if all conditions set up in the Instruction Manual are meet. Instruction Manuals and certificate regarding ATEX Declaration can be found at AROZONE.COM

Accessories

HANLEY CONTROLS
CLONMEL
www.hccl.ie

Air Line Connection Kit
66073-1

Diaphragm Failure Detection
67237

Flange Connection Kit
637341-E10N

Over-run Control
635040

*Please note pumps are not included with these kits.

	1/4" Non-Metallic	3/8" Non-Metallic	1/2" Non-Metallic	1/2" Classic Non-Metallic	3/4" Non-Metallic	1/2" Metallic
Air Line Connection Kit Kit includes Piggyback Filter/Regulator with gauge, pipe nipple and a 5-foot section of air hose.	66073-1	66073-1	66073-1	66073-1	66073-1	66073-1
Diaphragm Failure Detection (DFD) Provides a warning of a diaphragm failure by sensing the presence of liquid in the air chamber of the pump.	-	-	-	-	-	-
Cycle Sensor Kit (close electrical contact type) For monitoring pump operation. Can be used to monitor cycle rates, preventative maintenance and rough flow rate indication.	-	67386	67386	67168	67386	-
Flange Connection Kit Use with non-metallic EXP pumps with the flange manifold option. Flange kits meet DIN / A.N.S.I. specifications. Flange constructed of glass-filled polypropylene. Bolts, washers and nuts are stainless steel. (Gaskets included)	-	-	-	-	-	-
Over-run Control Shuts off pump when excessive cycling occurs due to empty fluid supply container.	-	-	635040	635040	635040	635040
Wall Mount Conveniently mount pump above container. Made of of heavy gauge coated steel. (pump not included) * Does not include hardware	-	67388	76763	-	76763	76763
Countdown Batcher Manual start batch counter kit controls the volume of fluid dispensed by controlling the number of pump cycles.	-	67072	67072		67072	67072
Solenoid Actuation Kit Control pump cycle rate with on/off signal from PLC or other device. Kit includes connector w/36" cable plus components and instructions to install on standard pump. For dosing and batching applications.	-	67165-1 (24VDC) 67165-2 (120VAC)	67165-1 (24VDC) 67165-2 (120VAC)	67165-1 (24VDC) 67165-2 (120VAC)	-	67165-1 (24VDC) for PD05R-X-X-B, 67165-2 (120VAC) for PD05R-X-X-B
Diaphragm Pump Speed Controls Controls air volume supplied to pump, thus permitting operator to control speed of pump. Can be panel mounted. Composite body.	104104-N02	104104-N02	104104-N02	104104-N02	104104-N02	104104-N02
Groundable Strap Reliable static control.	-	-	-	66885-1 Acetal Center Body	-	-
Screened Inlet Kit Protects inlet of pump from debri in submerged applications.	-	-	-	-	-	-

HANLEY CONTROLS
CLONMEL
www.hccl.ie

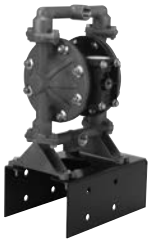

Wall Mount
76763

Countdown Batcher
67072

Solenoid Actuation Kit
67165-1

Speed Control
104104-N02

Groundable Strap
66885-1

Screened Inlet
67174-15

3/4" Metallic	1" Non-Metallic	1-1/2" Non-Metallic	2" Non-Metallic	1" Metallic	1-1/2" Metallic	2" Metallic	3" Metallic	1" 3:1 Ratio
66073-1	66073-2	66084-1	66109	66073-2	66084-1	66109	66109	-
-	-	67237 CI Center Bodies	67237 CI Center Bodies	-	67237 CI Center Bodies	-	-	-
-	67169	67169	67169	67169	67169	-	-	-
-	67078	67079	67080	-	-	-	-	-
635040	635040	23644-400	23644-400	635040	23644-400	635043	635043	-
76763	-	-	-	66100	62133	-	-	67142
67072	67072	67072-1	67072-1	67072	67072-1	-	-	-
-	67166-1 (24VDC) 67166-2 (120VAC)	67166-1 (24VDC) 67166-2 120VAC)	67166-1 (24VDC) 67166-2 (120VAC)	67166-1 (24VDC) 67166-2 (120VAC)	67166-1 (24VDC) 67166-2 (120VAC)	-	-	-
104104-N02	104104-N02	104104-N04	104104-N04	104104-N02	104104-N04	104104-N06	104104-N06	-
-	-	-	-	66885-1	66885-1	66885-1	66885-1	-
-	-	-	-	–	67174-15	67174-20	67174-30	-

HANLEY CONTROLS
CLONMEL
www.hccl.ie

Accessories

Siphon Tubes

For use when pumping from a 55 GAL (200 L) container; siphon tubes are available in PVC, carbon steel, or 316 stainless steel. 1″ siphon tubes come with foot valve for positive priming. All models include bung adapter.

Model no.	Description	For use with pumps
65109	Steel — NPT(F)	1″ (Metallic)
66779	PVC — NPT(F)	1″ (Non-Metallic)

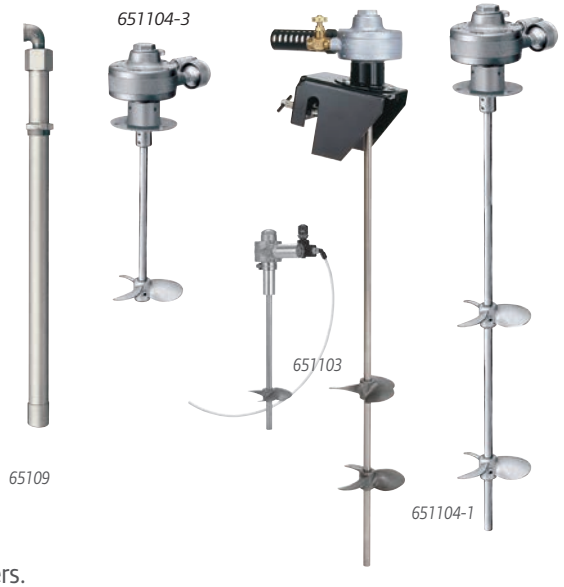

Material Agitators

Agitators available for both 5 GAL (20 L) and 55 GAL (200 L) containers. Air operated agitator motors generate between 500-1000 RPM 5 GAL (20 L), and 500-3000 RPM (for 55 GAL, 200 L). Agitator shaft and propellers are constructed of corrosion resistant 316 stainless steel.

Model no.	For drum	Mounting	Power	Motor speed	Propeller dia.	Axle length
651100	5 GAL (20 L)	1	0.33 hp	500 - 1000 rpm	4″ (102 mm)	12″(305 mm)
651103	55 GAL (200 L)	2	0.75 hp	500 - 3000 rpm	5″ (127 mm)	32.6″(830 mm)
651104-1	55 GAL (200 L)	1	0.95 hp	500 - 3000 rpm	5″ (127 mm)	32.6″(830 mm)
651104-3	5 GAL (20 L)	1	0.75 hp	500 - 3000 rpm	5″ (127 mm)	10.5″(267 mm)

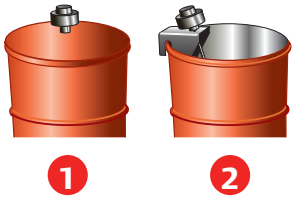

Drum Covers

Durable stainless steel and carbon steel drum covers, ccommodate the use of both diaphragm pump and agitator where you need.

Model no.	For drum	Marerial	For use with agitator:
66971	5 GAL (20 L)	Stainless steel	651100
66197	55 GAL (200 L)	Carbon steel	651104-1
94422	55 GAL (200 L)	Carbon steel	—

Pneumatic Liquid Level Sensor*

Used to control pump.
59916-1 to sense when fluid exceeds a desired level
59916-2 to sense when fluid falls below a desired level
* 3 or 4- way valve required

Liquid Level Sensor

Air Control Actuation Valves

3-way valve controls air supply to pump. Activation starts pump, deactivation cuts off air supply to pump and exhausts air from motor, which prevents stalling.

MQ3728-120-A for 1/2″ and 1″ pumps,
H254SS-120-A for 1-1/2″ pumps,
MQ3729-120-A for 2″ and 3″ pumps

24 VDC MQ3728-024-D for 1/2″ and 1″ pumps
H254SS-024-D for 1-1/2″ pumps
MQ3729-024-D for 2″ and 3″ pumps

MQ3728-120-A used on 1/2″ and 1″ pumps

Accessories

Pulsation Dampeners

Diaphragm pumps of any type have at least two points in their cycle where they provide no pressure or flow to a process. The unwanted result of this pressure fluctuation can often be material foaming, material pulsation, hydraulic shock or material splashing. While traditional pulsation dampeners can help reduce unwanted pulsation and other problems, they also require operator intervention and adjustments.

Automatic Shock Blockers®

- Automatic Air Adjustment - compensates for fluctuations in fluid pressure without operator intervention.
- Significant Pulsation Reduction - Shock Blockers deliver an average 60% - 80% pulsation reduction in high back pressure applications.
- Built for high-flow/aggressive fluid applications - the 2″ models can handle up to 2.6 L maximum fluid volume, and 3″ models up to 8.3 L maximum fluid volume.
- Broad Material Range for Compatibility - choose from PVDF, polypropylene, groundable acetal, aluminum, cast iron or stainless steel body materials for optimum pump-to-pulsation dampener compatibility
- Broad Diaphragm/Bladder Fluid Compatibility - choose from Santoprene, Nitrile, PTFE, Hytrel, Viton or Urethane for optimum fluid-to-diaphragm compatibility.
- Perfect for Process Applications - pulsation reduction in long piping runs help prevent costly fluid pipe and downstream valve damage.
- Bolted construction - for leak-free vessel integrity and a safer work-site.
- Ultra-Rugged Construction for Long service Life - both inside and out, the Shock Blockers are built tough to deliver worry-free, near pulse-free fluid handling.

Typical system

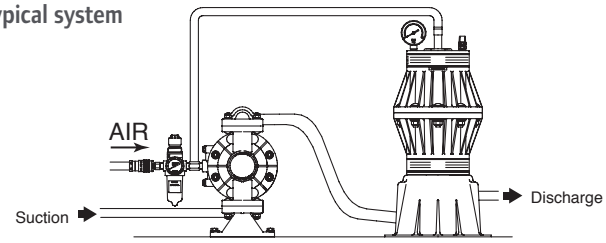

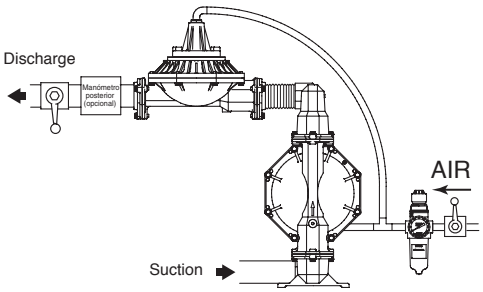

Ordering

Position	1	2		3	4	5		6
Example:	SBX0	X	-	X	X	S	-	X

Position 1 Model & Size	Position 2 Air Section	Position 3 Fluid Connection	Position 4 Fluid Section	Positon 5 Hardware	Position 6 Dia.Material
SB10 - 1″	P - Polypropylene K - PVDF (Kynar) D - Conductive Acetal	A - NPTF B - BSP	P - Polypropylene K - PVDF (Kynar) D - Conductive Acetal	S - Stainless Steel 304	A - Santoprene® C - Hytrel® T - PTFE U - Polyurethane
SB20 - 2″ SB30 - 3″	A - Aluminum C - Cast Iron P - Polypropylene/Aluminum* R - Polypropylene/ Stainless Steel* S - Stainless Steel	A - NPTF B - BSP F - 2″ ANSI/DIN Flange Inlet and Outlet* K - 2″ ANSI/DIN Flange Inlet/ NPTF Outlet* L - 2″ ANSI/DIN Flange Inlet/ BSPP Outlet*	A - Aluminum C - Cast Iron P - Polypropylene* S - Stainless Steel	P - Carbon Steel S - Stainless Steel	A - Santoprene® G - Nitrile T - PTFE / Santoprene® V - Viton®

Hytrel® is a registered trademark of DuPont company, Santoprene® is registered trademark of Monsanto and Viton® is a registered trademark of ExxonMobil

** Only available with 2" Polypropylene fluid sections.*

HANLEY CONTROLS
CLONMEL
www.hccl.ie

Maintenance Kits

637432-XX

637375-XX

Pump type		Models	Air Motor Section	Fluid Section	Major Air Valve Assembly
3/8"	Non-Metallic	PD03P, PE03P	637428	637429-XX	
1/2"	Non-Metallic	PD05P, PE05P	637428	637427-XX	—
	Metallic	PM05P	637389	637375-XX	—
		PD05A, PD05R, PE05A, PE05R	637428	637427-XX	—
3/4"	Non-Metallic	PD07P	637428	637427-XX	—
	Metallic	PD07R	637428	637427-XX	—
		66607A	637118-C	637119-XX-C	—
1"	Non-Metallic	6661A, 6661B	637118-C	637161-XX-C	—
	Metallic	66610, 66611, 66612, 66613	637118-C	637119-XX-C	—
		PH10A-XSS-SST	637338	637339	—
1 1/2"	Non-Metallic	6661T, 6661U	637118-C	637165-XX	—
	Metallic	66615, 66616, 66617, 66618	637118-C	637124-XX	—
		66M170	637118-C	637469-XX	—
2"	Non-Metallic	6662A, 6662B	637118-C	637165-XX	—
	Metallic	66625, 66627	637434	637432-XX	—
		66M270	637434	637468-XX	—
3"	Metallic	66630, 66632	637434	637433-XX	—
		66M320	637434	637467-XX	—
		PH30F-X	637369	637441-XX	637374-X

ARO Vibration Isolators

Protect your pump installation by reducing vibration. ARO Vibration Isolators are used for an efficient reduction of mechanical vibration and stress in the mounting system of an air operated diaphragm pump. They are recommended to be used with flexible fluid pipe connectors to isolate the impact of the pump vibration to fixed pipes.

Vibration Isolator

Port Size	Steel	Aluminum	Non-Metallic
3"	HSX-160	HSX-160	-
2"	HSX-160	HSX-110	HSX-70
1.5"	HSX-70	HSX-40	HSX-70
1"	HSX-20	HSX-20	HSX-20

- **Reduces up to 96% of vibration transmitted through the mount**
- **A set of 4 vibration isolators and mounting hardware are included**

Pump Airborne Noise Emissions

Pump Airborne Noise Emissions

The pump sound pressure levels published below have been updated to an Equivalent Continuous Sound Level (L_{Aeq}) to meet the intent of ANSI S1.13-1971. CAGI-PNEUROP S5.1 using four microphone locations.

Pump Port Size (Inches) Diaphragm Pumps	Air Operating Pressure (PSI)	Cycles/ Minute	Sound Pressure (LAeq)
1/2	70	60	75.0 db(A)
1	70	60	79.7 db(A)
			80.6 db(A)
1-1/2	70	60	81.0 db(A)
			82.8 db(A)
2	70	60	*85.0 db(A)
3	70	50	*83.0 db(A)

Material Service Guideline

This chart is a quick reference guide. Always check material compatibility with a trusted chemical guide.

		Scale 1 - 5 (5 is best)		
	Max. Operating Temp Limit F (C)	Chemical Resistance	Abrasion Resistance	Flex Life*
Acetal	180 (82)	3	3	-
Aluminum	-	1	3	-
Cast Iron	-	3	4	-
Geolast (Nitrile Based)	180 (82)	2	2	3
Hastelloy C	-	5	-	-
Hytrel	150 (66)	2	4	4
Neoprene	200 (93)	2	2	3
Nitrile	180 (82)	2	2	3
Polypropylene	175 (80)	4	2	-
Polyurethane	150 (66)	1	4	4
PTFE	225 (107)	5	2	4**
PVDF	200 (93)	5	2	-
Santoprene	225 (107)	4	4	5
Stain Steel (300 Series)	-	4	4	-
Stain Steel (400 Series)	-	3	5	-
Viton	350 (177)	4	2	1

** Applies to diaphragms only.*
*** Increased flex life with use of santoprene diaphragm backer.*

NOTE: Temperatures are reference for materials only. Refer to operator's manual for maximum pump operating temperature.

HANLEY CONTROLS
CLONMEL
www.hccl.ie

Viscosity Conversion Chart

Centi Poise	Poise	Saybolt Universal (SSU)	Saybolt Furol	Ford No. 3	Ford No. 4	Zahn No. 1	Zahn No. 2	Zahn No. 3
1	.01	31						
2	.02	34						
4	.04	38						
7	.07	47		8				
10	.10	60		9	5	30	16	
15	.15	80	13	10	8	34	17	
20	.20	100	15	12	10	37	18	
25	.24	130	17	15	12	41	19	
30	.30	160	19	19	14	44	20	
40	.40	210	24	25	18	52	22	
50	.50	260	29	29	22	60	24	
60	.60	320	34	33	25	68	27	
70	.70	370	39	36	28	72	30	
80	.80	430	42	41	31	81	34	
90	.90	480	49	45	32	88	37	10
100	1.0	530	54	50	34		41	12
120	1.2	580	59	58	41		49	14
140	1.4	690	70	66	45		58	16
160	1.6	790	79	72	50		66	18
180	1.8	900	91	81	54		74	20
200	2.0	1000	100	90	58		82	23
220	2.2	1100	110	98	62		88	25
240	2.4	1200	120	106	65			27
260	2.6	1280	128	115	68			30
280	2.8	1380	138	122	70			32
300	3.0	1475	148	130	74			34
320	3.2	1530	153	136	89			36
340	3.4	1630	163	142	95			39
360	3.6	1730	173	150	100			41
380	3.8	1850	185	160	106			43
400	4.0	1950	195	170	112			46
420	4.2	2050	205	180	118			48
440	4.4	2160	216	188	124			50
460	4.6	2270	227	200	130			52
480	4.8	2380	238	210	137			54
500	5.0	2480	248	218	143			58
550	5.5	2660	266	230	153			64
600	6.0	2900	290	250	170			68
700	7.0	3380	338	295	194			76
800	8.0	3880	388	340	223			
900	9.0	4300	430	365	247			
1000	10.0	4600	460	390	264			
1100	11	5200	520	445	299			
1200	12	5620	562	480	323			
1300	13	6100	610	520	350			
1400	14	6480	648	550	372			
1500	15	7000	700	595	400			
1600	16	7500	750	635	430			
1700	17	8000	800	680	460			
1800	18	8500	850	720	490			
1900	19	9000	900	760	520			
2000	20	9400	940	800	540			
2100	21	9850	985	835	565			
2200	22	10300	1030	875	592			
2300	23	10750	1075	910	617			
2400	24	11200	1120	950	645			
2500	25	11600	1160	985	676			
3000	30	14500	1450	1230	833			
3500	35	16500	1650	1400	950			
4000	40	18500	1850	1570	1060			
4500	45	21000	2100	1780	1175			
5000	50	23500	2350		1350			
5500	55	26000	2600		1495			
6000	60	28000	2800		1605			
6500	65	30000	3000		1720			
7000	70	32500	3250		1870			
7500	75	35000	3500		2010			
8000	80	37000	3700		2120			
8500	85	39500	3950		2270			
9000	90	41000	4100		2360			
9500	95	43000	4350		2470			
10000	100	46500	4650		2670			
15000	150	69400	6940					
20000	200	92500	9250					
30000	300	138600	13860					
40000	400	185000	18500					
50000	500	231000	23100					
60000	600	277500	27750					
70000	700	323500	32350					
80000	800	370000	37000					
90000	900	415500	41550					
100000	1000	462000	46200					
125000	1250	578000	57800					
150000	1500	694000	69400					
175000	1750	810000	81000					
200000	2000	925000	92500					

HANLEY CONTROLS
CLONMEL

www.hccl.ie

Distributed by:

www.AROzone.com arotechsupport@irco.com youtube.com/aropumps (800) 495-0276

About Ingersoll Rand

Ingersoll Rand Inc. (NYSE:IR), driven by an entrepreneurial spirit and ownership mindset, is dedicated to helping make life better for our employees, customers and communities. Customers lean on us for our technology-driven excellence in mission-critical flow creation and industrial solutions across 40+ respected brands where our products and services excel in the most complex and harsh conditions. Our employees develop customers for life through their daily commitment to expertise, productivity and efficiency. For more information, visit www.IRCO.com.

We are committed to using environmentally conscious print practices
©2015 Ingersoll Rand
IRITS-1215-196 EN 1220