Parker

Push-Lok®

Push-in Hose System

HANLEY CONTROLS
CLONMEL

www.hccl.ie

Catalogue 4482/UK

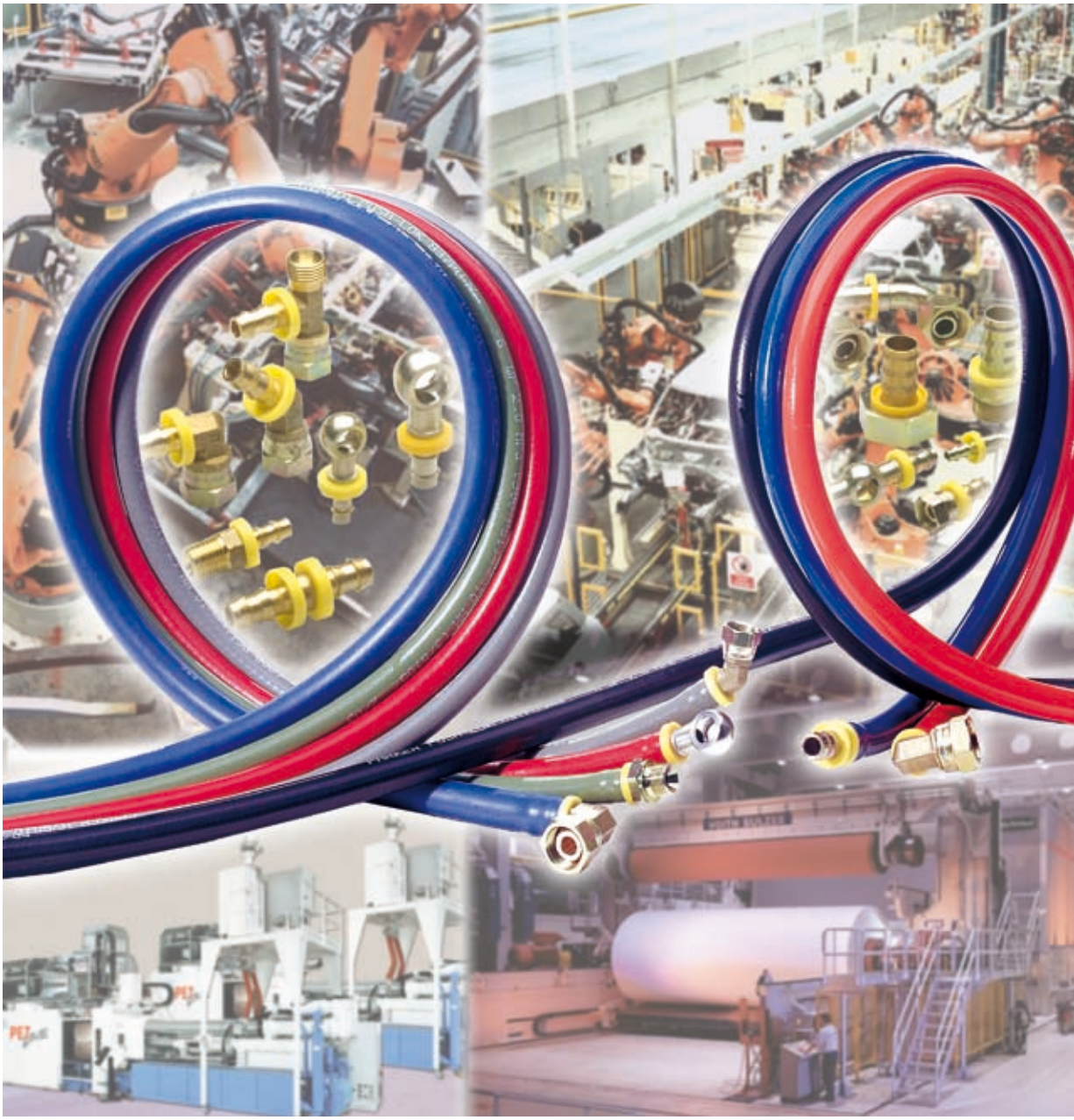

Push-Lok®

the intelligent solution for low pressure applications

HANLEY CONTROLS
CLONMEL

www.hccl.ie

Parker Push-Lok®-System

Parker Push-Lok is the world leading self-grip low pressure hose and fitting system.

Development

High quality hose types and a comprehensive fittings programme for a wide spectrum of requirements are now available as a result of continuous customer-oriented product development.

A result of the latest product development is the 837PU-*Plus* hybrid hose. Thanks to a new patented manufacturing process Parker has succeeded in combining a polymer cover with a synthetic elastomer tube to produce a unique hose that meets the highest of application demands.

Safety

The exact design match of hose and fittings combined with complete in-house production of all components allows excellent system safety and a pressure safety factor of 4 : 1

The Benefits of the Push-Lok

Features	Advantages
Low bending forces required	Good and easy hose handling/routing
Push-Lok self-grip hose fittings	Easy on site assembly without auxiliary devices
Functional matching of hose and fittings	High product safety
A selection of high quality tube compounds	Wide ranging chemical compatibility
Large selection of colours	Easy visual identification

HANLEY CONTROLS
CLONMEL

www.hccl.ie

A Choice of Hoses

9 hose types for a multitude of applications

- 6 rubber hoses
- 2 thermoplastic hoses
- 1 hybrid hose

6 different colours for

- optimal identification (size/medium/age...)
- easy workflow
- easy control of maintenance intervals
- simplified stock management
- attractive machine layout

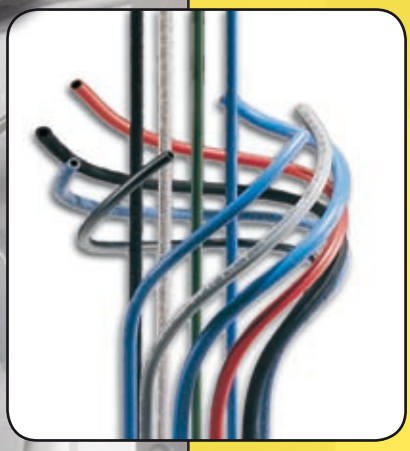

System

Benefits

- Long service life
- Low assembly costs
- Parker's product guarantee
- Large variety of applications
- Product code: Optimal media identification

One Fittings Program for all Push-Lok hoses

- including DIN, BSP, JIC and ORFS connections in brass, steel and stainless steel

Simple Assembly without Tools or Clamps

- Squarely cut the hose with a sharp knife
- Push the nipple into the hose up to the yellow plastic ring – that's all!

Push-Lok® for multiple applications

Machine Tools

Main applications

– Cooling and cutting fluid circuits
– Compressed air
– Leak oil

Typical requirements

– Abrasive resistance for placing in energy chains
– Resistance to cutting oils, water, emulsions and hydraulic media
– Nick resistance at small bend radii
– Coloured versions for media identification

Hose recommendation

– 830M, 837PU-*Plus*
– 831 for oil and oil emulsions, if temperature +70 °C up to +100 °C
– 836 for oil and oil emulsions, if temperature +100 °C up to +150 °C

Paper Industry

Main applications

– Water and emulsions
– Compressed air

Typical requirements

– Resistance to water emulsions
– Partial high temperature demands
– Good assembly characteristics for in-the-field operation

Hose recommendation

– 801
– 836 for oil and oil emulsions, if temperature +70 °C up to +150 °C

HANLEY CONTROLS
CLONMEL
www.hccl.ie

– functional, safety, durable

HANLEY CONTROLS
CLONMEL
www.hccl.ie

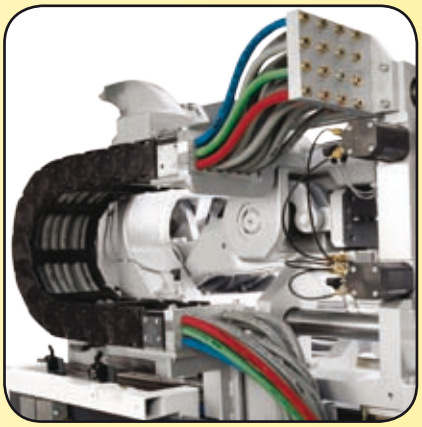

Injection Moulding Machines

Main applications

– Water circuits for tool cooling and temperature control
– Compressed air
– Leak oil

Typical requirements

– Abrasion resistance for placing in energy chains
– Resistance to water, emulsions and hydraulic media
– Nick resistance at small bend radii
– Coloured versions for media identification
– Good assembly characteristics for in-the-field operation

Hose recommendation

– 837PU-*Plus*
– 804 for water, if temperature +85 °C up to +93 °C

Chemical Industry

Main applications

– Water, emulsions and alkalis
– Compressed air

Typical requirements

– Media resistance
– Coloured versions for media identification

Hose recommendation

– 801, 830M
– 831 for oil and oil emulsions, if temperature +70 °C up to +100 °C

Push-Lok® for multiple applications

Transfer Lines (Automotive and other)

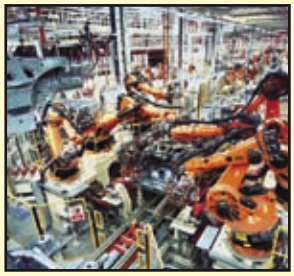

Main applications

– Compressed air (dry and oiled)
– Vacuum

Typical requirements

– Resistance to ultra-dry compressed air
– Vacuum- and nick-resistance at low bend radii
– Free from substances interfering with paint wetting
– Coloured versions for media identification
– Good assembly characteristics for in-the-field assembly

Hose recommendation

– 801 (not automotive industry)
– 830M, 837BM, 837PU-*Plus* (automotive industry)

PET Blow Forming Machines

Main applications

– Water circuits for tool cooling
– Compressed air

Typical requirements

– Resistance to water and emulsions
– Abrasion and torsion resistance for highly dynamic machine processes
– Coloured versions for media identification

Hose recommendation

– 830M, 837PU-*Plus*

– functional, safety, durable

HANLEY CONTROLS
CLONMEL
www.hccl.ie

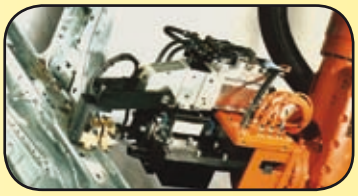

Robots and Welding Installations

Main applications

– Water circuits for welding gun cooling
– Compressed air (ultra-dry compressed air)
– Vacuum

Typical requirements

– Resistance to ultra-dry compressed air, water and emulsions
– Abrasion and torsion resistance for laying in hose and cable bundles
– Vacuum and nick resistance at low bend radii
– Resistance to weld spatter
– Free from substances interfering with paint wetting
– Coloured versions for media identification

Hose recommendation

– 830M, 837PU-*Plus*

Power Electronics

Main applications

– Cooling circuits for thyristor controls

Typical requirements

– High electrical resistance
– Special colour identification
– Resistance to water and emulsions

Hose recommendation

– 838M

Index

Push-Lok Hose

801 – Push-Lok Hose 1
804 – Push-Lok Hose 2
821FR – Push-Lok Hose 3
830M – Push-Lok Hose 4
831 – Push-Lok Hose 5
836 – Push-Lok Hose 6
837BM – Push-Lok Hose 7
837PU-*Plus* – Hybrid Push-Lok Hose 8
838M – Push-Lok Hose 9

Push-Lok Fittings

Metric . . . . . .11 - 20
60°- 90° Cone . . . . . .21 - 23
BSP . . . . . .24 - 29
NPTF . . . . . .30 - 32
JIC - SAE . . . . . .33 - 37
ORFS 38
Special . . . . . .39 - 44
Union . . . . . .45 - 47

Assembly Instructions 49

Chemical Resistance . . . . . .50 - 55

Safety Guide . . . . . .56 - 58

801 – Push-Lok Hose

for a variety of applications

Main Features

- Very flexible
- Wide range of colours
- Available up to size -16

Primary Applications/Restrictions

All Markets: For low demanding applications
Paper and Pulp: For water / air applications
Not permitted for use in air brake systems.
Not suitable for high dynamic pulsation systems.
Not recommended for motor fuels.

Hose Construction

Tube: Synthetic rubber
Reinforcement: High tensile textile layer
Cover: High performance synthetic rubber in different colours

Recommended Fluids

Air, dry air, water, water-oil-emulsions and water-glycol-emulsions. (Mineral based hydraulic and lubricating oils with chemical and thermal (70 °C) restriction).
Consult the chemical compatibility section on pages 50–55 for more detailed information.

Temperature Range

-40 °C up to +100 °C

Exception: Air ..... max. +70 °C
Water ..... max. +85 °C

Fittings Series

82

Part Number	Hose I.D.				Hose O.D.	Pressure rating: max. dynamic working pressure		min. burst pressure		Vaccum kilo Pascal*1	min. bend radius	Weight
	DN	Inch	Size	mm	mm	MPa	psi	MPa	psi	kPa	mm	kg/m
801-4-XXX-RL	6	1/4	-4	6,3	12,7	1,7	250	6,8	1000	95	65	0,13
801-6-XXX-RL	10	3/8	-6	9,5	15,9	1,7	250	6,8	1000	95	75	0,16
801-8-XXX-RL	12	1/2	-8	12,7	19,8	1,7	250	6,8	1000	95	130	0,27
801-10-XXX-RL	16	5/8	-10	15,9	23,0	1,7	250	6,8	1000	51	150	0,28
801-12-XXX-RL	20	3/4	-12	19,1	26,2	1,7	250	6,8	1000	51	180	0,36
801-16-XXX-RL	25	1	-16	25,4	32,5	1,2	175	4,8	700	51	250	0,55

*1 = the vacuum values listed in the table are vacuum pressure values in kPa. For an absolute value subtract the table value from 101 kPa
Note: when ordering, specify Push-Lok hose part number, followed by size, followed by colour. Example: 801-4-XXX-RL
XXX = BLK = black
BLU = blue
RED = red
GRN = green
GRA = grey

Example: 801-4-GRN-RL (green)
RL = only available on reels
801-16-XXX-RL is only available in grey or black.

Information about standard products or non-standard products can be found in the current price list.
Dimensions shown may be changed at any time without prior notice.

HANLEY CONTROLS
CLONMEL
www.hccl.ie

804 – Push-Lok Hose

for high temperature water / phosphate ester fluid

Main Features

- For hot water up to +93 °C
- For phosphate-ester fluids

Primary Applications/Restrictions

Injection Moulding: For special temper circuits
Not permitted for use in air brake systems.
Not suitable for high dynamic pulsation systems.
Do not allow tube to contact any petroleum based fluids.

Hose Construction

Tube: EPDM material
Reinforcement: High tensile textile layer
Cover: Black EPDM material

Recommended Fluids

Phosphate ester based hydraulic fluids, water, water glycol emulsions, air. Use liquid soap as lubricant. Consult the chemical compatibility section on pages 50-55 for more detailed information.

Temperature Range

up to +80 °C

Exception: Air ..... max. +70 °C
Water ..... max. +93 °C

Fittings Series

82

Part Number	Hose I.D.				Hose O.D.	Pressure rating: max. dynamic working pressure		Pressure rating: min. burst pressure		min. bend radius	Weight
	DN	Inch	Size	mm	mm	MPa	psi	MPa	psi	mm	kg/m
804-4-RL	6	1/4	-4	6,3	12,7	0,9	125	3,4	500	65	0,13
804-6-RL	10	3/8	-6	9,5	15,9	0,9	125	3,4	500	75	0,16
804-8-RL	12	1/2	-8	12,7	19,8	0,9	125	3,4	500	130	0,27
804-12-RL	20	3/4	-12	19,1	26,2	0,9	125	3,4	500	180	0,36

RL = only available on reels

HANLEY CONTROLS
CLONMEL
www.hccl.ie

Information about standard products or non-standard products can be found in the current price list.
Dimensions shown may be changed at any time without prior notice.

821FR – Push-Lok Hose

with fire retardant hose cover

Main Features

- Fire retardant hose cover
- Very flexible
- For high level air temperatures

Primary Applications/Restrictions

All Markets: For a variety of applications

Not permitted for use in air brake systems.
Not suitable for high dynamic pulsation systems.
Not recommended for motor fuels.

Hose Construction

Tube: Synthetic PKR-rubber
Reinforcement: High tensile textile layer
Cover: A fire retardant special fiber outer cover

Recommended Fluids

Mineral based hydraulic and lubricating oils, coolant, antifreeze, air, water and water-oil emulsions.
Consult the chemical compatibility section on pages 50-55 for more detailed information.

Temperature Range

-40 °C up to +100 °C

Exception: Air .....max. +100 °C
Water .....max. +85 °C

Fittings Series

82

Part Number	Hose I.D.				Hose O.D.	Pressure rating: max. dynamic working pressure		min. burst pressure		Vaccum kilo Pascal*1	min. bend radius	Weight
	DN	Inch	Size	mm	mm	MPa	psi	MPa	psi	kPa	mm	kg/m
821FR-4-XXX-RL	6	1/4	-4	6,3	12,7	2,4	350	9,7	1400	95	65	0,12
821FR-6-XXX-RL	10	3/8	-6	9,5	15,9	2,0	300	8,3	1200	95	75	0,16
821FR-8-XXX-RL	12	1/2	-8	12,7	19,8	2,0	300	8,3	1200	95	130	0,18
821FR-12-XXX-RL	20	3/4	-12	19,0	26,2	1,7	250	6,8	1000	95	180	0,33

*1 = the vacuum values listed in the table are vacuum pressure values in kPa. For an absolute value subtract the table value from 101 kPa
Note: when ordering, specify Push-Lok hose part number, followed by size, followed by colour. Example: 821FR-4-XXX-RL

XXX = BLK = black
BLU = blue
GRN = green
WHT = white
BRN = brown

Example: 821FR-4-GRN-RL (green)
RL = only available on reels

Information about standard products or non-standard products can be found in the current price list.
Dimensions shown may be changed at any time without prior notice.

HANLEY CONTROLS
CLONMEL
www.hccl.ie

830M – Push-Lok Hose

for a variety of applications including automotive

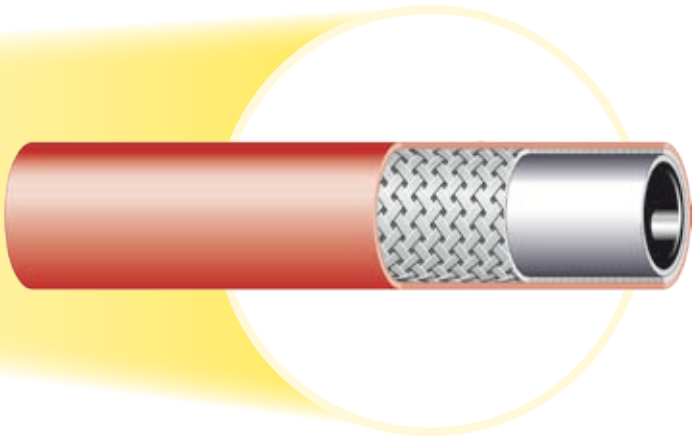

Main Features

- Chemical resistant for a wide range of fluids
- High abrasion resistance
- Free of wetting disturbing substances
- Small O.D. and bend radii

Primary Applications/Restrictions

All Markets: For a variety of applications
Robot and Automotive market:
For hose bundle systems
Not permitted for use in air brake systems.
Not suitable for high dynamic pulsation systems.
Not recommended for motor fuels.

Hose Construction

Tube: Polyurethane material
Reinforcement: High tensile textile layer
Cover: High performance polyurethane material in different colours

Recommended Fluids

Mineral based hydraulic and lubricating oils, coolant, antifreeze, air, water and water-oil emulsions. Consult the chemical compatibility section on pages 50-55 for more detailed information.

Temperature Range

-40 °C up to +80 °C

Fittings Series

82

Part Number	Hose I.D.				Hose O.D.	Pressure rating: max. dynamic working pressure		min. burst pressure		Vaccum kilo Pascal*1	min. bend radius	Weight
	DN	Inch	Size	mm	mm	MPa	psi	MPa	psi	kPa	mm	kg/m
830M-4-XXX-RL	6	1/4	-4	6,3	10,7	1,6	232	6,4	928	10	30	0,08
830M-6-XXX-RL	10	3/8	-6	9,5	14,9	1,6	232	6,4	928	10	50	0,13
830M-8-XXX-RL	12	1/2	-8	12,7	19,1	1,6	232	6,4	928	10	70	0,20
830M-10-XXX-RL	16	5/8	-10	16,0	23,0	1,6	232	6,4	928	10	90	0,26
830M-12-XXX-RL	20	3/4	-12	19,0	26,0	1,6	232	6,4	928	10	110	0,31

*1 = the vacuum values listed in the table are vacuum pressure values in kPa. For an absolute value subtract the table value from 101 kPa
Note: when ordering, specify Push-Lok hose part number, followed by size, followed by colour. Example: 830M-4-XXX-RL
XXX = BLK = black
BLU = blue
RED = red
GRN = green

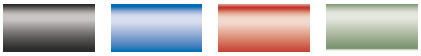

Example: 830M-4-GRN-RL (green)
RL = only available on reels

Information about standard products or non-standard products can be found in the current price list.
Dimensions shown may be changed at any time without prior notice.

HANLEY CONTROLS
CLONMEL
www.hccl.ie

831 – Push-Lok Hose

ideal for petroleum based fluids

Main Features

- Max. working pressure up to 2,4 MPa
- High temperature level for petroleum based fluids
- Nitrile (NBR) inner tube – extended fluid compatibility

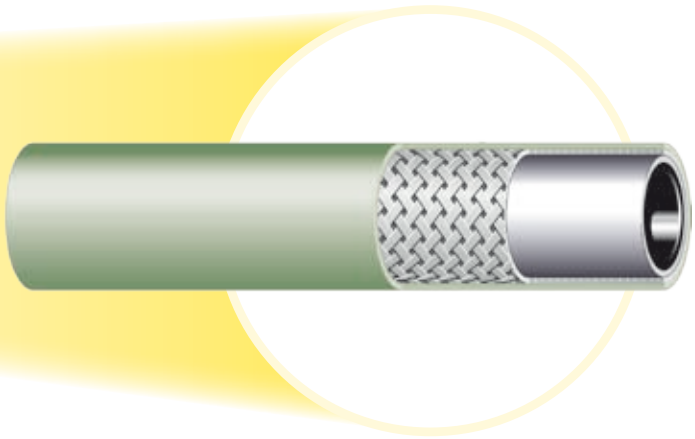

Primary Applications/Restrictions

All Markets: For a wide range of fluids

Not permitted for use in air brake systems.
Not suitable for high dynamic pulsation systems.
Not recommended for motor fuels.

Hose Construction

Tube: Synthetic rubber
Reinforcement: High tensile textile layer
Cover: High performance synthetic rubber in different colours

Recommended Fluids

Mineral based hydraulic and lubricating oils, coolant, antifreeze, air, water and water-oil emulsions. Consult the chemical compatibility section on pages 50-55 for more detailed information.

Temperature Range

-40 °C up to +100 °C

Exception: Air ..... max. +70 °C
Water ..... max. +85 °C

Fittings Series

82

Part Number	Hose I.D.				Hose O.D.	Pressure rating: max. dynamic working pressure		Pressure rating: min. burst pressure		Vaccum kilo Pascal*1	min. bend radius	Weight
	DN	Inch	Size	mm	mm	MPa	psi	MPa	psi	kPa	mm	kg/m
831-4-XXX-RL	6	1/4	-4	6,3	12,7	2,4	350	9,7	1400	95	65	0,13
831-6-XXX-RL	10	3/8	-6	9,5	15,9	2,0	300	8,3	1200	95	75	0,16
831-8-XXX-RL	12	1/2	-8	12,7	19,8	2,0	300	8,3	1200	95	130	0,27
831-10-XXX-RL	16	5/8	-10	15,9	23,0	2,0	300	8,3	1200	51	150	0,28
831-12-XXX-RL	20	3/4	-12	19,1	26,2	2,0	300	8,3	1200	51	180	0,36

*1 = the vacuum values listed in the table are vacuum pressure values in kPa. For an absolute value subtract the table value from 101 kPa
Note: when ordering, specify Push-Lok hose part number, followed by size, followed by colour. Example: 831-4-XXX-RL
XXX = BLK = black
BLU = blue
RED = red
GRN = green

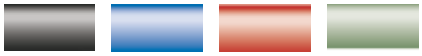

Example: 831-4-GRN-RL (green)
RL = only available on reels

Information about standard products or non-standard products can be found in the current price list.
Dimensions shown may be changed at any time without prior notice.

HANLEY CONTROLS
CLONMEL
www.hccl.ie

836 – Push-Lok Hose

for high oil temperatures

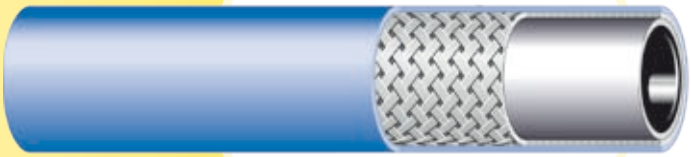

Main Features

- Max. oil temperature up to +150 °C
- Blue hose cover

Primary Applications/Restrictions

All Markets: Special high temperature applications

Not permitted for use in air brake systems.
Not suitable for high dynamic pulsation systems.
Not recommended for motor fuels.

Hose Construction

Tube: Synthetic PKR rubber
Reinforcement: High tensile textile layer
Cover: Blue synthetic PKR rubber

Recommended Fluids

Mineral based hydraulic and lubricating oils, coolant, antifreeze, air, water and water-oil emulsions. Consult the chemical compatibility section on pages 50-55 for more detailed information.

Temperature Range

-48 °C up to +150 °C

Exception: Air ..... max. +100 °C
Water ..... max. +85 °C

Fittings Series

82

Part Number	Hose I.D.				Hose O.D.	Pressure rating max. dynamic working pressure		min. burst pressure		Vaccum kilo Pascal*1	min. bend radius	Weight
	DN	Inch	Size	mm	mm	MPa	psi	MPa	psi	kPa	mm	kg/m
836-4-RL	6	1/4	-4	6,3	12,7	1,7	250	6,8	1000	95	65	0,13
836-6-RL	10	3/8	-6	9,5	15,7	1,7	250	6,8	1000	95	75	0,16
836-8-RL	12	1/2	-8	12,7	19,8	1,7	250	6,8	1000	95	130	0,27
836-10-RL	16	5/8	-10	15,9	23,1	1,7	250	6,8	1000	51	150	0,28
836-12-RL	20	3/4	-12	19,1	26,2	1,7	250	6,8	1000	51	180	0,36

*1 = the vacuum values listed in the table are vacuum pressure values in kPa. For an absolute value subtract the table value from 101 kPa
RL = only available on reels

HANLEY CONTROLS
CLONMEL
www.hccl.ie

Information about standard products or non-standard products can be found in the current price list.
Dimensions shown may be changed at any time without prior notice.

837BM – Push-Lok Hose

for a variety of applications including automotive

Main Features

- High level of hose flexibility
- High abrasion resistant
- Free of wetting disturbing substances
- Low push-in forces

Primary Applications/Restrictions

All Markets: For a variety of applications
Automotive: For water / air applications
Not permitted for use in air brake systems.
Not suitable for high dynamic pulsation systems.
Not recommended for motor fuels.

Hose Construction

Tube: Synthetic rubber
Reinforcement: High tensile textile layer
Cover: High performance synthetic rubber in different colours

Recommended Fluids

Air, dry air, water, water-oil-emulsions and water-glycol-emulsions. (Mineral based hydraulic and lubricating oils with chemical and thermal (70 °C) restriction).
Consult the chemical compatibility section on pages 50–55 for more detailed information.

Temperature Range -40 °C up to +100 °C

Exception: Air ..... max. +70 °C
Water ..... max. +85 °C

Fittings Series 82

Part Number	Hose I.D.				Hose O.D.	Pressure rating max. dynamic working pressure		min. burst pressure		Vaccum kilo Pascal*1	min. bend radius	Weight
	DN	Inch	Size	mm	mm	MPa	psi	MPa	psi	kPa	mm	kg/m
837BM-4-XXX-RL	6	1/4	-4	6,3	12,7	1,6	235	6,4	940	95	65	0,13
837BM-6-XXX-RL	10	3/8	-6	9,5	15,9	1,6	235	6,4	940	95	75	0,16
837BM-8-XXX-RL	12	1/2	-8	12,7	19,8	1,6	235	6,4	940	95	130	0,27
837BM-10-XXX-RL	16	5/8	-10	15,9	23,0	1,6	235	6,4	940	51	150	0,28
837BM-12-XXX-RL	20	3/4	-12	19,1	26,2	1,6	235	6,4	940	51	180	0,36

*1 = the vacuum values listed in the table are vacuum pressure values in kPa. For an absolute value subtract the table value from 101 kPa
Note: when ordering, specify Push-Lok hose part number, followed by size, followed by colour. Example: 837BM-4-XXX-RL
XXX = BLK = black
BLU = blue
RED = red
GRN = green
GRA = grey

Example: 837BM-4-GRN-RL (green)
RL = only available on reels

HANLEY CONTROLS
CLONMEL
www.hccl.ie

Information about standard products or non-standard products can be found in the current price list.
Dimensions shown may be changed at any time without prior notice.

837PU-*Plus* – Hybrid Push-Lok Hose

for a variety of applications including automotive

Main Features

- High level of hose flexiblity
- High abrasion resistance
- High torsion resistance
- Free of wetting disturbing substances
- Low push-in forces

Primary Applications/Restrictions

All Markets: For high demanding applications
For energy chain systems

Robot and Automotive market:
For hose bundle systems

Not permitted for use in air brake systems.
Not suitable for high dynamic pulsation systems.
Not recommended for motor fuels.

Hose Construction

Tube: Synthetic rubber
Reinforcement: High tensile textile layer
Cover: High performance polyurethane material in different colours

Recommended Fluids

Air, dry air, water, water-oil-emulsions and water-glycol-emulsions. (Mineral based hydraulic and lubricating oils with chemical and thermal (70 °C) restriction).
Consult the chemical compatibility section on pages 50–55 for more detailed information.

Temperature Range -40 °C up to +100 °C

Exception: Air .....max. +70 °C
Water .....max. +85 °C

Fittings Series 82

Part Number	Hose I.D.				Hose O.D.	Pressure rating: max. dynamic working pressure		min. burst pressure		Vaccum kilo Pascal*1	min. bend radius	Weight
	DN	Inch	Size	mm	mm	MPa	psi	MPa	psi	kPa	mm	kg/m
837PU-4-xxx-RL	6	1/4	-4	6,3	12,7	1,6	235	6,4	940	95	30	0,11
837PU-6-xxx-RL	10	3/8	-6	9,5	15,9	1,6	235	6,4	940	95	50	0,15
837PU-8-xxx-RL	12	1/2	-8	12,7	19,8	1,6	235	6,4	940	95	70	0,26
837PU-10-xxx-RL	16	5/8	-10	15,9	23,0	1,6	235	6,4	940	51	90	0,27
837PU-12-xxx-RL	20	3/4	-12	19,1	26,2	1,6	235	6,4	940	51	110	0,33

*1 = the vacuum values listed in the table are vacuum pressure values in kPa. For an absolute value subtract the table value from 101 kPa
Note: when ordering, specify Push-Lok hose part number, followed by size, followed by colour. Example: 837PU-4-XXX-RL
XXX = BLK = black
BLU = blue
RED = red
GRN = green
GRA = grey
Example: 837PU-4-GRN-RL (green)
RL = only available on reels

Information about standard products or non-standard products can be found in the current price list.
Dimensions shown may be changed at any time without prior notice.

HANLEY CONTROLS
CLONMEL
www.hccl.ie

838M – Push-Lok Hose

for non conductive applications

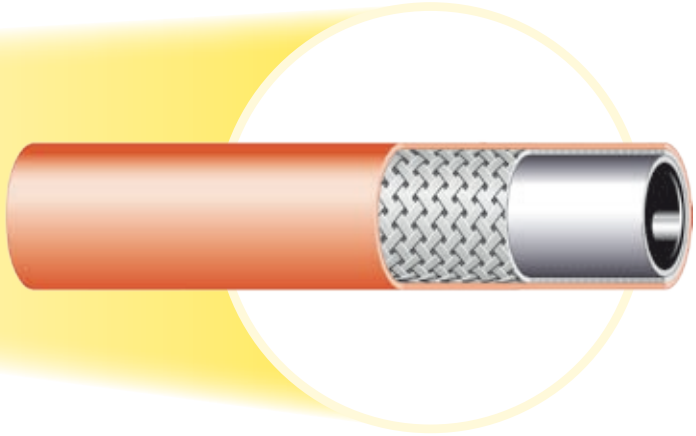

Main Features

- Non conductive hose

Primary Applications/Restrictions

Special Market: For special electrical requirements
Not permitted for use in air brake systems.
Not suitable for high dynamic pulsation systems.
Not recommended for motor fuels.

Hose Construction

Tube: Polyurethane material
Reinforcement: High tensile textile layer
Cover: Orange coloured Polyurethane material

Recommended Fluids

Mineral based hydraulic and lubricating oils, coolant, antifreeze, water, water-oil emulsions.
Consult the chemical compatibility section on pages 50-55 for more detailed information.

Temperature Range

-40 °C up to +80 °C

Fittings Series

82

Part Number	Hose I.D.				Hose O.D.	Pressure rating: max. dynamic working pressure		min. burst pressure		Vaccum kilo Pascal*1	min. bend radius	Weight
XXXX-XX-XX	DN	Inch	Size	mm	mm	MPa	psi	MPa	psi	kPa	mm	kg/m
838M-4-RL	6	1/4	-4	6,3	11,2	1,6	232	6,4	928	10	30	0,08
838M-6-RL	10	3/8	-6	9,5	15,0	1,6	232	6,4	928	10	50	0,13
838M-8-RL	12	1/2	-8	12,7	19,1	1,6	232	6,4	928	10	70	0,20
838M-10-RL	16	5/8	-10	16,0	23,0	1,6	232	6,4	928	10	90	0,26
838M-12-RL	20	3/4	-12	19,0	26,0	1,6	232	6,4	928	10	110	0,31

*1 = the vacuum values listed in the table are vacuum pressure values in kPa. For an absolute value subtract the table value from 101 kPa
RL = only available on reels

Information about standard products or non-standard products can be found in the current price list.
Dimensions shown may be changed at any time without prior notice.

HANLEY CONTROLS
CLONMEL
www.hccl.ie

C3 – Female Metric – Light Series – Swivel – Straight (Ball Nose)

DKL

Approved fitting series for hose types:

82 — 801 / 804 / 821FR / 830M / 831 / 836 / 837BM / 837PU-Plus / 838M

Part Number (82)	Hose I.D. DN	Inch	Size	mm	Thread metric	Tube O.D. mm	A mm	B mm	W mm
3C382-6-4	6	1/4	-4	6,3	M12x1,5	6	33	14	14
3C382-6-4B	6	1/4	-4	6,3	M12x1,5	6	33	14	14
3C382-6-4BK	6	1/4	-4	6,3	M12x1,5	6	33	14	14
3C382-6-4C	6	1/4	-4	6,3	M12x1,5	6	35	16	14
3C382-8-4	6	1/4	-4	6,3	M14x1,5	8	33	14	17
3C382-8-4B	6	1/4	-4	6,3	M14x1,5	8	36	16	19
3C382-8-4BK	6	1/4	-4	6,3	M14x1,5	8	36	16	19
3C382-8-4C	6	1/4	-4	6,3	M14x1,5	8	33	14	17
3C382-10-4	6	1/4	-4	6,3	M16x1,5	10	34	14	19
3C382-10-4BK	6	1/4	-4	6,3	M16x1,5	10	34	14	19
3C382-10-4C	6	1/4	-4	6,3	M16x1,5	10	36	17	19
3C382-10-6	10	3/8	-6	9,5	M16x1,5	10	38	15	19
3C382-10-6B	10	3/8	-6	9,5	M16x1,5	10	38	15	19
3C382-10-6BK	10	3/8	-6	9,5	M16x1,5	10	38	15	19
3C382-10-6C	10	3/8	-6	9,5	M16x1,5	10	40	17	19
3C382-12-6	10	3/8	-6	9,5	M18x1,5	12	38	16	22
3C382-12-6BK	10	3/8	-6	9,5	M18x1,5	12	38	16	22
3C382-12-6C	10	3/8	-6	9,5	M18x1,5	12	38	15	22
3C382-15-8	12	1/2	-8	12,7	M22x1,5	15	42	15	27
3C382-15-8B	12	1/2	-8	12,7	M22x1,5	15	42	15	27
3C382-15-8C	12	1/2	-8	12,7	M22x1,5	15	44	17	27
3C382-15-8BK	12	1/2	-8	12,7	M22x1,5	15	46	17	27
3C382-15-10	16	5/8	-10	15,9	M22x1,5	15	56	20	27
3C382-18-10	16	5/8	-10	15,9	M26x1,5	18	53	17	32
3C382-18-10C	16	5/8	-10	15,9	M26x1,5	18	54	17	32
3C382-22-12	20	3/4	-12	19,0	M30x2	22	53	17	36
3C382-22-12B	20	3/4	-12	19,0	M30x2	22	53	17	36
3C382-22-12BK	20	3/4	-12	19,1	M30x2	22	53	17	36
3C382-28-16	25	1	-16	25,4	M36x2	28	58	22	41
3C382-28-16BK	25	1	-16	25,4	M36x2	28	58	22	41
3C382-28-16C-K	25	1	-16	25,4	M36x2	28	58	20	41

Information about standard products or non-standard products can be found in the current price list.
Dimensions shown may be changed at any time without prior notice.

Material: Steel, zinc plated; B: Brass
C: Stainless Steel; K: Without plastic ring

C4 – Female Metric – Light Series – Swivel – 45° Elbow (Ball Nose)

DKL 45°

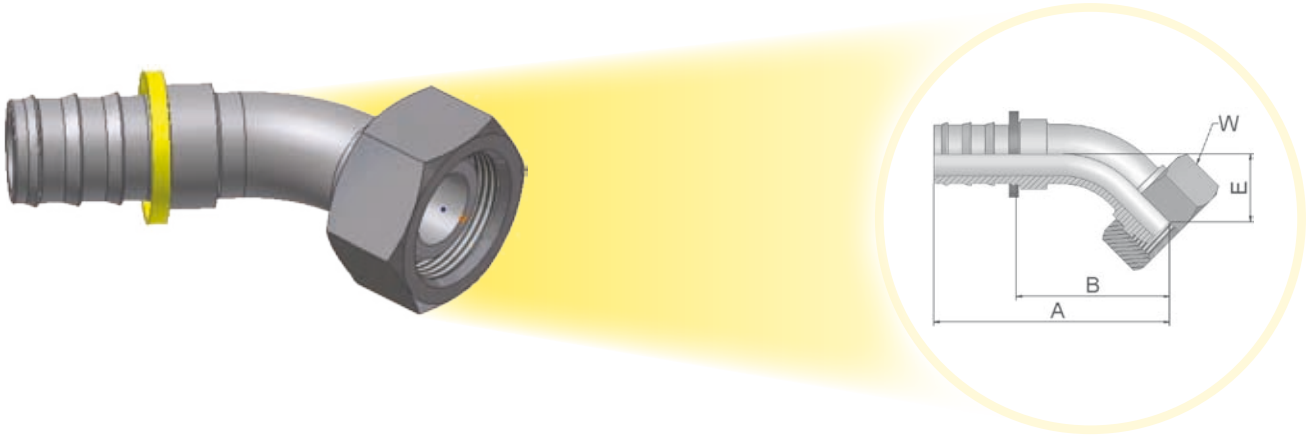

Approved fitting series for hose types:

82 — 801 / 804 / 821FR / 830M / 831 / 836 / 837BM / 837PU-*Plus* / 838M

Part Number 82	Hose I.D.				Thread metric	Tube O.D.	A	B	E	W
	DN	Inch	Size	mm		mm	mm	mm	mm	mm
3C482-6-4	6	1/4	-4	6,3	M12x1,5	6	51	32	16	14
3C482-6-4B	6	1/4	-4	6,3	M12x1,5	6	51	32	16	14
3C482-8-4	6	1/4	-4	6,3	M14x1,5	8	51	32	16	17
3C482-8-4B	6	1/4	-4	6,3	M14x1,5	8	51	32	16	17
3C482-8-4C	6	1/4	-4	6,3	M14x1,5	8	49	30	14	17
3C482-10-6	10	3/8	-6	9,5	M16x1,5	10	58	35	18	19
3C482-10-6B	10	3/8	-6	9,5	M16x1,5	10	58	35	18	19
3C482-10-6C	10	3/8	-6	9,5	M16x1,5	10	59	36	19	19
3C482-12-6	10	3/8	-6	9,5	M18x1,5	12	59	36	18	22
3C482-12-6B	10	3/8	-6	9,5	M18x1,5	12	59	36	18	22
3C482-15-8	12	1/2	-8	12,7	M22x1,5	15	68	41	19	27
3C482-15-8B	12	1/2	-8	12,7	M22x1,5	15	68	41	19	27
3C482-15-10	16	5/8	-10	15,9	M22x1,5	15	82	45	21	27
3C482-15-10B	16	5/8	-10	15,9	M22x1,5	15	82	45	21	27
3C482-18-10	16	5/8	-10	15,9	M26x1,5	18	81	45	21	32
3C482-18-10B	16	5/8	-10	15,9	M26x1,5	18	81	44	21	32
3C482-18-12	20	3/4	-12	19,1	M26x1,5	18	99	62	31	32
3C482-22-12	20	3/4	-12	19,1	M30x2	22	88	52	23	36
3C482-22-12B	20	3/4	-12	19,1	M30x2	22	88	52	23	36
3C482-28-16-K	25	1	-16	25,4	M36x2	28	105	67	30	41

Material: Steel, zinc plated
B = Brass
C = Stainless Steel
K = Without plastic ring

Information about standard products or non-standard products can be found in the current price list.
Dimensions shown may be changed at any time without prior notice.

HANLEY CONTROLS
CLONMEL
www.hccl.ie

C5 – Female Metric – Light Series – Swivel – 90° Elbow (Ball Nose)

DKL 90°

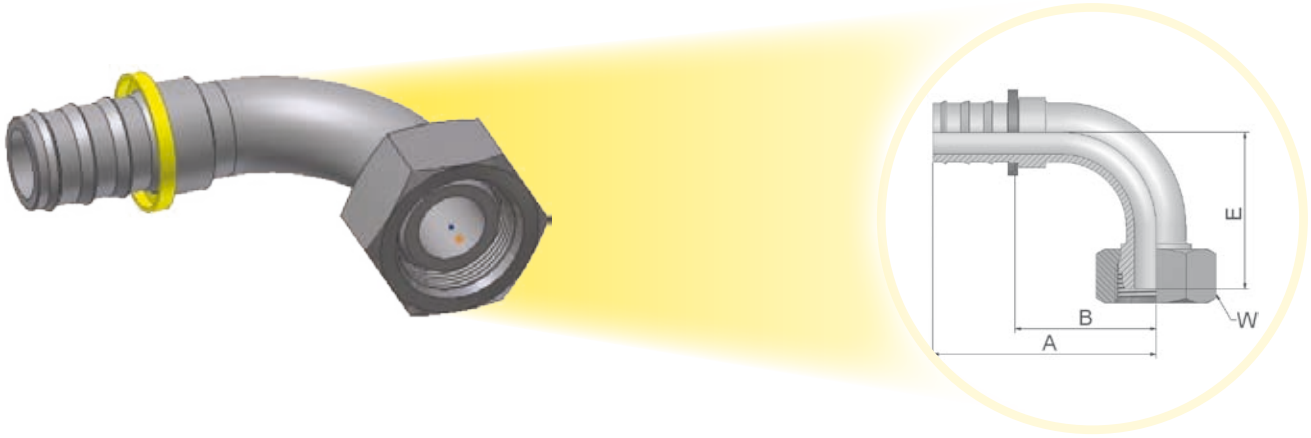

Approved fitting series for hose types:

82 — 801 / 804 / 821FR / 830M / 831 / 836 / 837BM / 837PU-*Plus* / 838M

Part Number (82)	Hose I.D. DN	Inch	Size	mm	Thread metric	Tube O.D. mm	A mm	B mm	E mm	W mm
3C582-6-4	6	1/4	-4	6,3	M12x1,5	6	42	23	29	14
3C582-6-4B	6	1/4	-4	6,3	M12x1,5	6	42	23	29	14
3C582-8-4	6	1/4	-4	6,3	M14x1,5	8	42	23	29	17
3C582-8-4B	6	1/4	-4	6,3	M14x1,5	8	42	23	29	17
3C582-10-4	6	1/4	-4	6,3	M16x1,5	10	42	23	29	19
3C582-10-4C	6	1/4	-4	6,3	M16x1,5	10	43	23	31	19
3C582-10-6	10	3/8	-6	9,5	M16x1,5	10	49	27	33	19
3C582-10-6B	10	3/8	-6	9,5	M16x1,5	10	49	27	33	19
3C582-10-6C	10	3/8	-6	9,5	M16x1,5	10	49	27	33	19
3C582-12-6	10	3/8	-6	9,5	M18x1,5	12	49	27	34	22
3C582-12-6B	10	3/8	-6	9,5	M18x1,5	12	49	27	34	22
3C582-12-6C	10	3/8	-6	9,5	M18x1,5	12	49	27	34	22
3C582-15-8	12	1/2	-8	12,7	M22x1,5	15	60	34	39	27
3C582-15-8B	12	1/2	-8	12,7	M22x1,5	15	60	34	39	27
3C582-15-8C	12	1/2	-8	12,7	M22x1,5	15	60	34	39	27
3C582-18-10	16	5/8	-10	15,9	M26x1,5	18	74	37	43	32
3C582-22-12	20	3/4	-12	19,1	M30x2	22	88	51	50	36
3C582-22-12B	20	3/4	-12	19,1	M30x2	22	88	51	50	36
3C582-22-12C	20	3/4	-12	19,1	M30x2	22	88	51	54	36
3C582-28-16-K	25	1	-16	25,4	M36x2	28	99	61	70	41

Material: Steel, zinc plated
B = Brass
C = Stainless Steel
K = Without plastic ring

Information about standard products or non-standard products can be found in the current price list.
Dimensions shown may be changed at any time without prior notice.

HANLEY CONTROLS
CLONMEL
www.hccl.ie

9B – Metric – Swivel Female 45° Elbow – Light Series

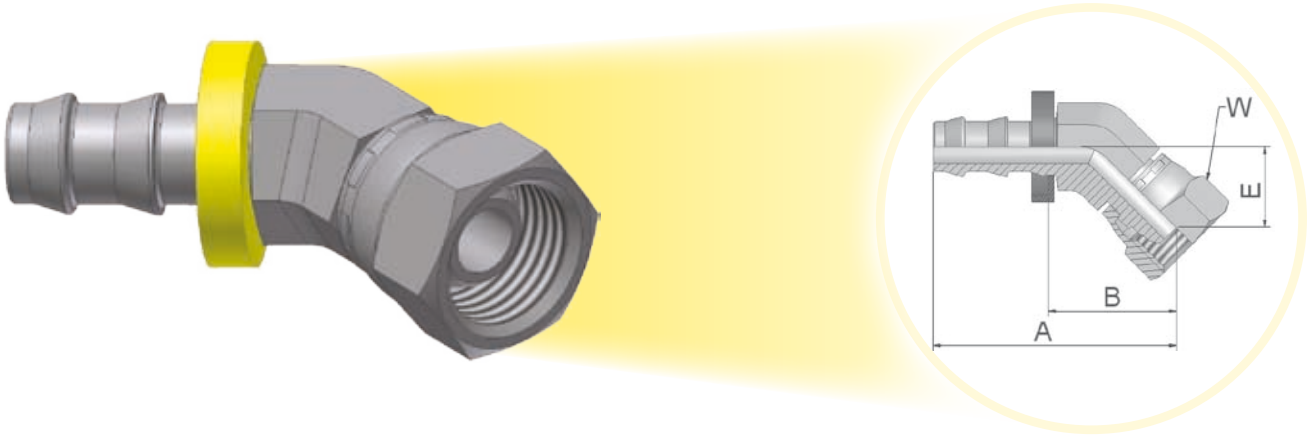

Approved fitting series for hose types:

Part Number 82	Hose I.D.				Thread metric	Tube O.D.	A	B	E	W
	DN	Inch	Size	mm		mm	mm	mm	mm	mm
39B82-6-4BK	6	1/4	-4	6,3	M12x1,5	6	44	23	16	14
39B82-8-4BK	6	1/4	-4	6,3	M14x1,5	8	43	23	15	19
39B82-10-6BK	10	3/8	-6	9,5	M16x1,5	10	48	25	16	19
39B82-12-6BK	10	3/8	-6	9,5	M18x1,5	12	50	26	17	22
39B82-15-8BK	12	1/2	-8	12,7	M22x1,5	15	54	26	18	27

B = Brass
K = Without plastic ring

HANLEY CONTROLS
CLONMEL
www.hccl.ie

Information about standard products or non-standard products can be found in the current price list.
Dimensions shown may be changed at any time without prior notice.

9C – Metric – Swivel Female 90° Elbow – Light Series

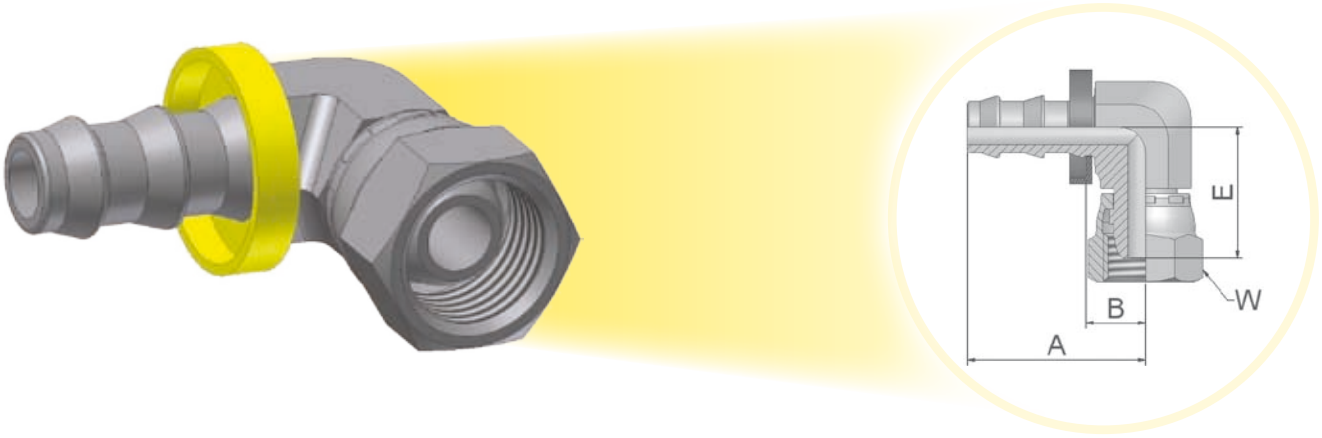

Approved fitting series for hose types:

Part Number (82)	Hose I.D. DN	Inch	Size	mm	Thread metric	Tube O.D. mm	A mm	B mm	E mm	W mm
39C82-6-4BK	6	1/4	-4	6,3	M12x1,5	6	30	10	22	14
39C82-8-4BK	6	1/4	-4	6,3	M14x1,5	8	30	10	22	19
39C82-10-6BK	10	3/8	-6	9,5	M16x1,5	10	34	10	25	19
39C82-12-6BK	10	3/8	-6	9,5	M18x1,5	12	34	10	25	22
39C82-15-8BK	12	1/2	-8	12,7	M22x1,5	15	43	15	32	27

B = Brass
K = Without plastic ring

HANLEY CONTROLS
CLONMEL
www.hccl.ie

Information about standard products or non-standard products can be found in the current price list.
Dimensions shown may be changed at any time without prior notice.

CA – Female Metric 24° – Light Series with O-Ring – Swivel – Straight

ISO 12151-2-SWS-L – DKOL

Approved fitting series for hose types:

82 — 801 / 804 / 821FR / 830M / 831 / 836 / 837BM / 837PU-*Plus* / 838M

Part Number 82	Hose I.D. DN	Inch	Size	mm	Thread metric	Tube O.D. mm	A mm	B mm	W mm
3CA82-6-4	6	1/4	-4	6,3	M12x1,5	6	40	21	14
3CA82-6-4B	6	1/4	-4	6,3	M12x1,5	6	40	21	14
3CA82-8-4	6	1/4	-4	6,3	M14x1,5	8	36	17	17
3CA82-8-4B	6	1/4	-4	6,3	M14x1,5	8	36	17	17
3CA82-10-4	6	1/4	-4	6,3	M16x1,5	10	36	17	19
3CA82-10-6	10	3/8	-6	9,5	M16x1,5	10	40	17	19
3CA82-10-6B	10	3/8	-6	9,5	M16x1,5	10	40	17	19
3CA82-12-6	10	3/8	-6	9,5	M18x1,5	12	40	17	22
3CA82-12-6B	10	3/8	-6	9,5	M18x1,5	12	40	17	22
3CA82-15-8	12	1/2	-8	12,7	M22x1,5	15	44	18	27
3CA82-15-8B	12	1/2	-8	12,7	M22x1,5	15	44	18	27
3CA82-15-10	16	5/8	-10	15,9	M22x1,5	15	60	23	27
3CA82-15-10B	16	5/8	-10	15,9	M22x1,5	15	60	23	27
3CA82-18-10	16	5/8	-10	15,9	M26x1,5	18	56	19	32
3CA82-22-12	20	3/4	-12	19,1	M30x2	22	58	21	36
3CA82-22-12B	20	3/4	-12	19,1	M30x2	22	58	21	36

Material: Steel, zinc plated
B: Brass
Fittings with standard O-Ring seals can be used for temperatures from -30 °C up to +105 °C.

HANLEY CONTROLS
CLONMEL
www.hccl.ie

Information about standard products or non-standard products can be found in the current price list.
Dimensions shown may be changed at any time without prior notice.

CE – Female Metric 24° – Light Series with O-Ring – Swivel – 45° Elbow

ISO 12151-2-SWE-L – DKOL 45°

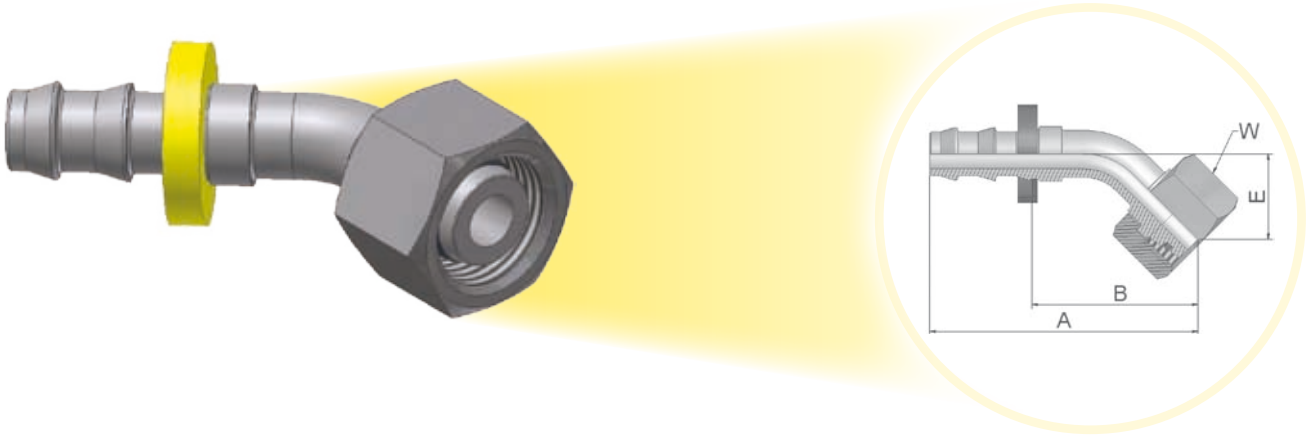

Approved fitting series for hose types:

Part Number 82	Hose I.D. DN	Inch	Size	mm	Thread metric	Tube O.D. mm	A mm	B mm	E mm	W mm
3CE82-6-4	6	1/4	-4	6,3	M12x1,5	6	56	37	21	14
3CE82-8-4	6	1/4	-4	6,3	M14x1,5	8	51	31	16	17
3CE82-10-6	10	3/8	-6	9,5	M16x1,5	10	59	37	19	19
3CE82-12-6	10	3/8	-6	9,5	M18x1,5	12	60	37	19	22
3CE82-15-8	12	1/2	-8	12,7	M22x1,5	15	69	43	21	27
3CE82-18-10	16	5/8	-10	15,9	M26x1,5	18	83	46	23	32
3CE82-22-12	20	3/4	-12	19,1	M30x2	22	97	60	26	36

Material: Steel, zinc plated
Fittings with standard O-Ring seals can be used for temperatures from -30 °C up to +105 °C.

HANLEY CONTROLS
CLONMEL
www.hccl.ie

Information about standard products or non-standard products can be found in the current price list.
Dimensions shown may be changed at any time without prior notice.

CF – Female Metric 24° – Light Series with O-Ring – Swivel – 90° Elbow

ISO 12151-2-SWE-L – DKOL 90°

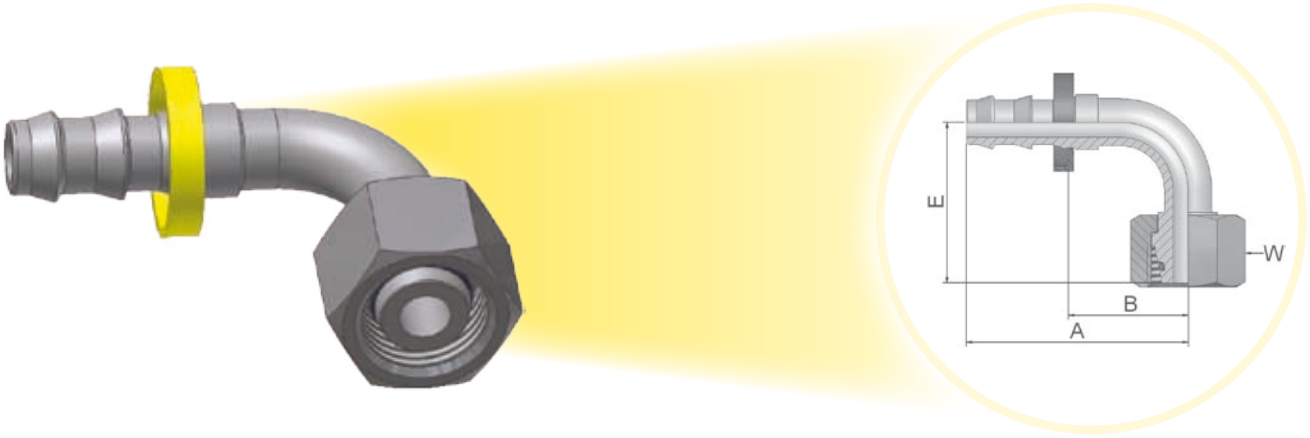

Approved fitting series for hose types:

82 — 801 / 804 / 821FR / 830M / 831 / 836 / 837BM / 837PU-*Plus* / 838M

Part Number 82	Hose I.D. DN	Inch	Size	mm	Thread metric	Tube O.D. mm	A mm	B mm	E mm	W mm
3CF82-6-4	6	1/4	-4	6,3	M12x1,5	6	42	23	36	14
3CF82-8-4	6	1/4	-4	6,3	M14x1,5	8	42	23	32	17
3CF82-10-4	6	1/4	-4	6,3	M16x1,5	10	42	23	31	19
3CF82-10-6	10	3/8	-6	9,5	M16x1,5	10	49	27	35	19
3CF82-10-6B	10	3/8	-6	9,5	M16x1,5	10	49	27	35	19
3CF82-12-6	10	3/8	-6	9,5	M18x1,5	12	49	27	36	22
3CF82-12-6B	10	3/8	-6	9,5	M18x1,5	12	49	27	36	22
3CF82-15-8	12	1/2	-8	12,7	M22x1,5	15	58	32	41	27
3CF82-18-10	16	5/8	-10	15,9	M26x1,5	18	74	37	45	32
3CF82-22-12	20	3/4	-12	19,1	M30x2	22	88	51	55	36

B & BK parts have brass nipples and steel nuts.
Fittings with standard O-Ring seals can be used for temperatures from -30 °C up to +105 °C.
Special O-Rings are available on request.

HANLEY CONTROLS
CLONMEL
www.hccl.ie

Information about standard products or non-standard products can be found in the current price list.
Dimensions shown may be changed at any time without prior notice.

D0 – Male Metric 24° – Light Series – Rigid – Straight

ISO 12151-2-S-L – CEL

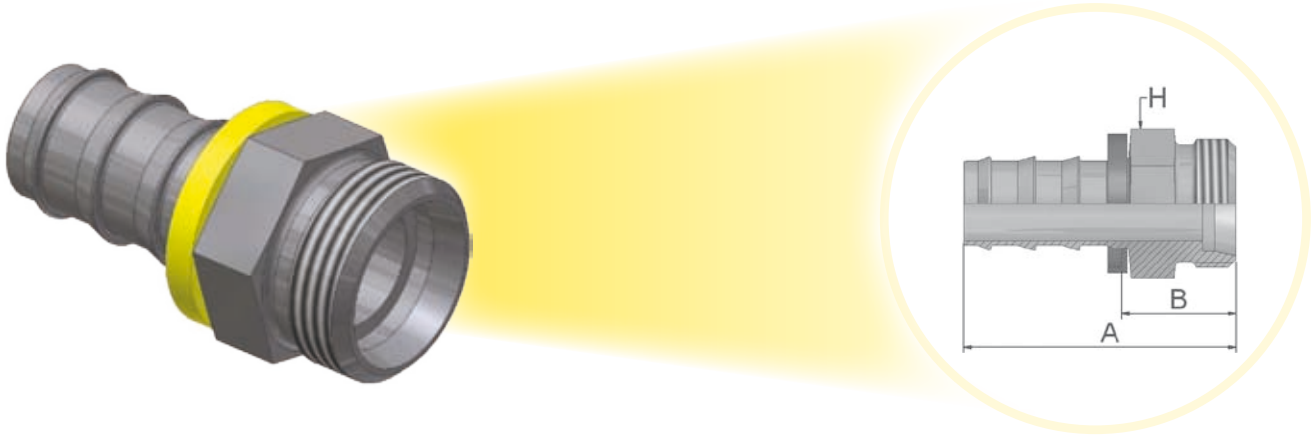

Approved fitting series for hose types:

82 — 801 / 804 / 821FR / 830M / 831 / 836 / 837BM / 837PU-Plus / 838M

Part Number XXXX.XX.XX (82)	Hose I.D. DN	Hose I.D. Inch	Hose I.D. Size	Hose I.D. mm	Thread metric	Tube O.D. mm	A mm	B mm	H mm
3D082-6-4	6	1/4	-4	6,3	M12x1,5	6	35	16	12
3D082-8-4	6	1/4	-4	6,3	M14x1,5	8	36	17	14
3D082-10-6	10	3/8	-6	9,5	M16x1,5	10	41	18	17
3D082-10-6B	10	3/8	-6	9,5	M16x1,5	10	41	18	17
3D082-10-6C	10	3/8	-6	9,5	M16x1,5	10	41	18	17
3D082-12-6	10	3/8	-6	9,5	M18x1,5	12	41	18	19
3D082-12-6B	10	3/8	-6	9,5	M18x1,5	12	41	18	19
3D082-12-6C	10	3/8	-6	9,5	M18x1,5	12	41	18	19
3D082-15-8	12	1/2	-8	12,7	M22x1,5	15	49	23	22
3D082-15-8B	12	1/2	-8	12,7	M22x1,5	15	49	23	22
3D082-15-8BK	12	1/2	-8	12,7	M22x1,5	15	49	22	22
3D082-15-8C	12	1/2	-8	12,7	M22x1,5	15	49	22	22
3D082-18-8	12	1/2	-8	12,7	M26x1,5	18	48	21	27
3D082-18-10	16	5/8	-10	15,9	M26x1,5	18	58	21	27
3D082-22-12	20	3/4	-12	19,1	M30x2	22	63	27	30
3D082-22-12B	20	3/4	-12	19,1	M30x2	22	63	27	30

Material: Steel, zinc plated
B = Brass
C = Stainless Steel
K = Without plastic ring

HANLEY CONTROLS
CLONMEL
www.hccl.ie

Information about standard products or non-standard products can be found in the current price list.
Dimensions shown may be changed at any time without prior notice.

1D – Metric Standpipe – Light Series – Rigid – Straight

ISO 8434-1 – BEL

Approved fitting series for hose types:

82 — 801 / 804 / 821FR / 830M / 831 / 836 / 837BM / 837PU-*Plus* / 838M

Part Number (XXXX.XX.XX) 82	Hose I.D.				Tube O.D.	A	B	D
	DN	Inch	Size	mm	mm	mm	mm	mm
31D82-6-4	6	1/4	-4	6,3	6	44	25	22
31D82-6-4B	6	1/4	-4	6,3	6	44	25	22
31D82-8-4	6	1/4	-4	6,3	8	44	25	22
31D82-8-4B	6	1/4	-4	6,3	8	44	25	22
31D82-10-6	10	3/8	-6	9,5	10	49	26	23
31D82-10-6B	10	3/8	-6	9,5	10	49	26	23
31D82-10-6C	10	3/8	-6	9,5	10	49	26	23
31D82-12-6	10	3/8	-6	9,5	12	49	27	23
31D82-12-6B	10	3/8	-6	9,5	12	49	27	23
31D82-12-6C	10	3/8	-6	9,5	12	49	27	23
31D82-15-8	12	1/2	-8	12,7	15	55	29	25
31D82-15-8B	12	1/2	-8	12,7	15	55	29	25
31D82-15-8C	12	1/2	-8	12,7	15	55	29	25
31D82-18-10	16	5/8	-10	15,9	18	67	30	26
31D82-18-10B	16	5/8	-10	15,9	18	67	30	26
31D82-22-12	20	3/4	-12	19,1	22	69	32	28
31D82-22-12B	20	3/4	-12	19,1	22	69	32	28

Attention: For assembly of nut and sleeve use pre-assembly body.
Material: Steel, zinc plated
B: Brass
C: Material: Stainless Steel

HANLEY CONTROLS
CLONMEL
www.hccl.ie

Information about standard products or non-standard products can be found in the current price list.
Dimensions shown may be changed at any time without prior notice.

5C – 60°- 90° Cone Swivel Female

Approved fitting series for hose types:

82 — 801 / 804 / 821FR / 830M / 831 / 836 / 837BM / 837PU-*Plus* / 838M

Part Number (82)	Hose I.D. DN	Hose I.D. Inch	Hose I.D. Size	Hose I.D. mm	Thread metric	A mm	B mm	W mm
35C82-12x1-4BK	6	1/4	-4	6,3	M12x1	33	13	14
35C82-6-4BK	6	1/4	-4	6,3	M12x1,5	33	14	14
35C82-10-6BK	10	3/8	-6	9,5	M16x1,5	38	15	19
35C82-10-6B	10	3/8	-6	9,5	M16x1,5	38	15	19
35C82-15-8BK	12	1/2	-8	12,7	M22x1,5	44	18	27
35C82-15-8B	12	1/2	-8	12,7	M22x1,5	44	18	27
35C82-18-10BK	16	5/8	-10	15,9	M26x1,5	56	18	32

B = Brass
K = Without plastic ring

HANLEY CONTROLS
CLONMEL
www.hccl.ie

Information about standard products or non-standard products can be found in the current price list.
Dimensions shown may be changed at any time without prior notice.

6C – 60°- 90° Cone Swivel Female – 45° Elbow

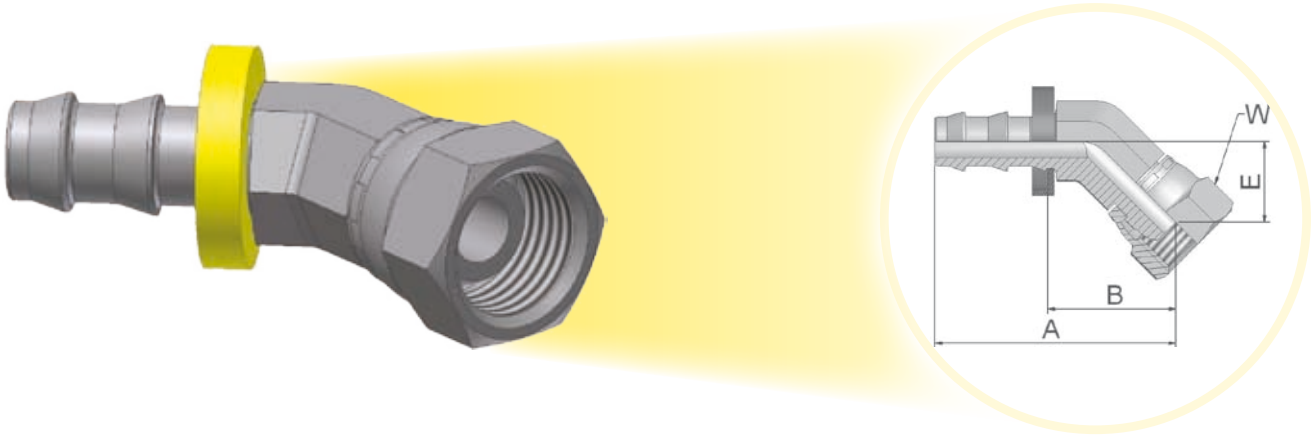

Approved fitting series for hose types:

82 — 801 / 804 / 821FR / 830M / 831 / 836 / 837BM / 837PU-*Plus* / 838M

Part Number (82)	Hose I.D.				Thread metric	A	B	E	W
	DN	Inch	Size	mm		mm	mm	mm	mm
36C82-12x1-4BK	6	1/4	-4	6,3	M12x1	43	22	15	14
36C82-6-4BK	6	1/4	-4	6,3	M12x1,5	44	25	16	14
36C82-6-4B	6	1/4	-4	6,3	M12x1,5	44	25	16	14
36C82-10-6BK	10	3/8	-6	9,5	M16x1,5	48	26	16	19
36C82-10-6B	10	3/8	-6	9,5	M16x1,5	48	26	16	19
36C82-15-8BK	12	1/2	-8	12,7	M22x1,5	54	28	18	27

B = Brass
K = Without plastic ring

HANLEY CONTROLS
CLONMEL
www.hccl.ie

Information about standard products or non-standard products can be found in the current price list.
Dimensions shown may be changed at any time without prior notice.

7C – 60°- 90° Cone Swivel Female – 90° Elbow

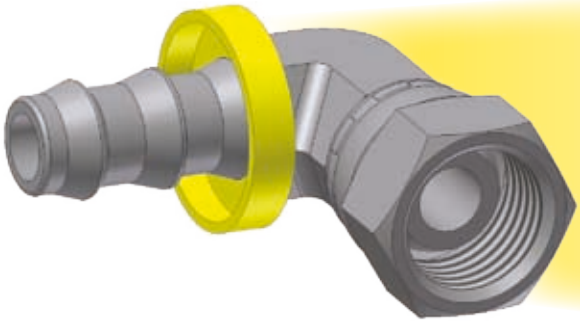

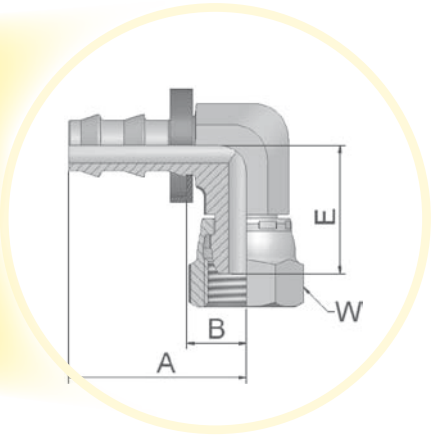

Approved fitting series for hose types:

82 — 801 / 804 / 821FR / 830M / 831 / 836 / 837BM / 837PU-Plus / 838M

Part Number (82)	Hose I.D. DN	Inch	Size	mm	Thread metric	A mm	B mm	E mm	W mm
37C82-12x1-4BK	6	1/4	-4	6,3	M12x1	30	10	22	14
37C82-12x1-4B	6	1/4	-4	6,3	M12x1	30	10	22	14
37C82-6-4BK	6	1/4	-4	6,3	M12x1,5	30	11	22	14
37C82-6-4B	6	1/4	-4	6,3	M12x1,5	30	11	22	14
37C82-10-6BK	10	3/8	-6	9,5	M16x1,5	34	11	25	19
37C82-10-6B	10	3/8	-6	9,5	M16x1,5	34	11	25	19
37C82-15-8BK	12	1/2	-8	12,7	M22x1,5	43	16	32	27
37C82-15-8B	12	1/2	-8	12,7	M22x1,5	43	16	32	27

B = Brass
K = Without plastic ring

Information about standard products or non-standard products can be found in the current price list.
Dimensions shown may be changed at any time without prior notice.

HANLEY CONTROLS
CLONMEL
www.hccl.ie

92 – Female BSP Parallel Pipe – Swivel – Straight (60° Cone)

BS5200-A – DKR

Approved fitting series for hose types:

82 — 801 / 804 / 821FR / 830M / 831 / 836 / 837BM / 837PU-*Plus* / 838M

Part Number 82	Hose I.D.				Thread BSP	A	B	W
	DN	Inch	Size	mm		mm	mm	mm
39282-4-4	6	1/4	-4	6,3	1/4x19	33	14	17
39282-4-4B	6	1/4	-4	6,3	1/4x19	33	14	17
39282-4-4C	6	1/4	-4	6,3	1/4x19	33	14	19
39282-6-4B	6	1/4	-4	6,3	3/8x19	37	18	22
39282-6-6	10	3/8	-6	9,5	3/8x19	37	14	19
39282-6-6B	10	3/8	-6	9,5	3/8x19	37	14	19
39282-6-6C	10	3/8	-6	9,5	3/8x19	40	17	22
39282-8-8	12	1/2	-8	12,7	1/2x14	42	15	27
39282-8-8B	12	1/2	-8	12,7	1/2x14	42	15	27
39282-8-8C	12	1/2	-8	12,7	1/2x14	43	16	27
39282-10-10	16	5/8	-10	15,9	5/8x14	53	16	30
39282-10-10B	16	5/8	-10	15,9	5/8x14	55	18	30
39282-12-10C	16	5/8	-10	15,9	3/4x14	55	18	32
39282-12-12	20	3/4	-12	19,0	3/4x14	58	21	32
39282-12-12B	20	3/4	-12	19,0	3/4x14	58	21	32
39292-16-16	25	1	-16	25,4	1x11	57	20	41

Material: Steel, zinc plated
B: Brass
C: Material: Edelstahl

HANLEY CONTROLS
CLONMEL
www.hccl.ie

Information about standard products or non-standard products can be found in the current price list.
Dimensions shown may be changed at any time without prior notice.

B1 – Female BSP Parallel Pipe – Swivel – 45° Elbow (60° Cone)

BS 5200-D, DKR 45°

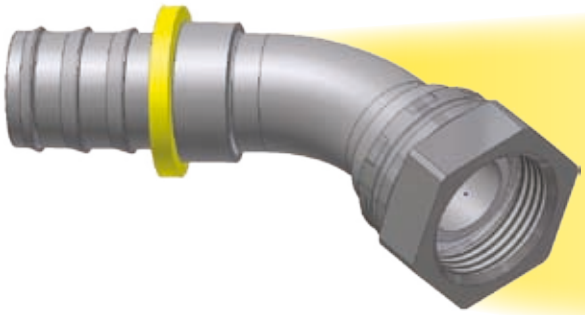

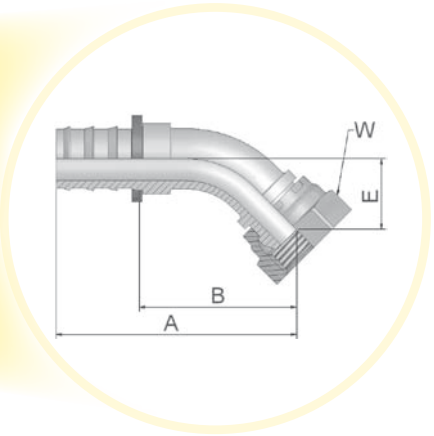

Approved fitting series for hose types:

Part Number 82	Hose I.D. DN	Inch	Size	mm	Thread BSP	A mm	B mm	E mm	W mm
3B182-4-4	6	1/4	-4	6,3	1/4x19	51	32	16	17
3B182-6-6	10	3/8	-6	9,5	3/8x19	58	35	18	19
3B182-6-6B	10	3/8	-6	9,5	3/8x19	69	46	17	19
3B182-8-8	12	1/2	-8	12,7	1/2x14	68	41	19	27
3B182-8-8B	12	1/2	-8	12,7	1/2x14	68	41	19	27
3B182-10-10	16	5/8	-10	15,9	5/8x14	81	45	21	30
3B182-12-12	20	3/4	-12	19,0	3/4x14	92	55	27	32
3B182-16-16-K	25	1	-16	25,4	1x11	106	68	31	41

Material: Steel, zinc plated
B = Brass
K = Without plastic ring

HANLEY CONTROLS
CLONMEL
www.hccl.ie

Information about standard products or non-standard products can be found in the current price list.
Dimensions shown may be changed at any time without prior notice.

B2 – Female BSP Parallel Pipe – Swivel – 90° Elbow (60° Cone)

BS 5200-B, DKR 90°

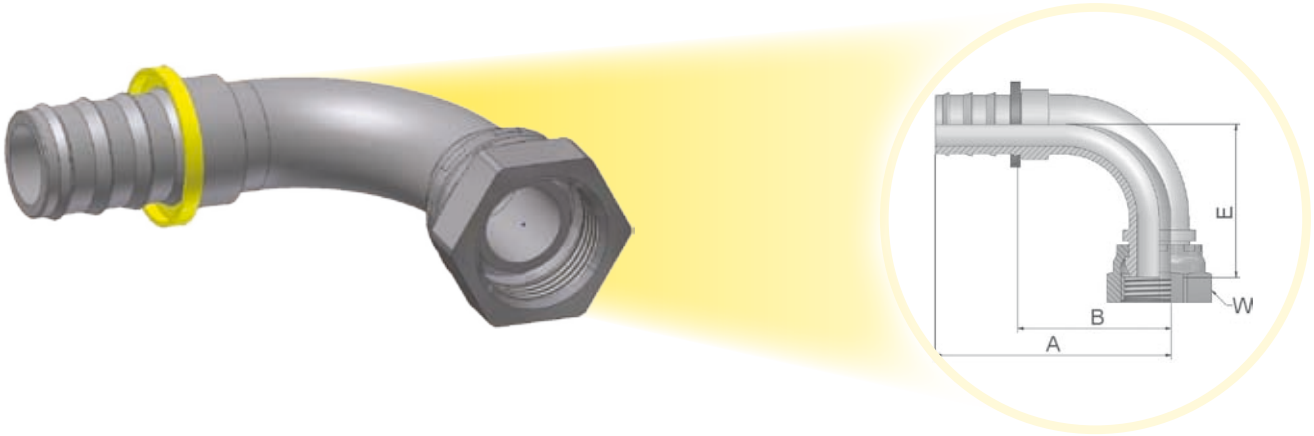

Approved fitting series for hose types:

82 — 801 / 804 / 821FR / 830M / 831 / 836 / 837BM / 837PU-*Plus* / 838M

Part Number 82	Hose I.D. DN	Inch	Size	mm	Thread BSP	A mm	B mm	E mm	W mm
3B282-4-4	6	1/4	-4	6,3	1/4x19	42	23	29	17
3B282-4-4B	6	1/4	-4	6,3	1/4x19	42	23	29	17
3B282-6-6	10	3/8	-6	9,5	3/8x19	49	27	33	19
3B282-6-6B	10	3/8	-6	9,5	3/8x19	49	27	33	19
3B282-8-8	12	1/2	-8	12,7	1/2x14	60	34	39	27
3B282-8-8B	12	1/2	-8	12,7	1/2x14	60	34	39	27
3B282-10-8	12	1/2	-8	12,7	5/8x14	58	32	40	30
3B282-10-10	16	5/8	-10	15,9	5/8x14	74	37	43	30
3B282-10-10B	16	5/8	-10	15,9	5/8x14	74	37	44	30
3B282-12-12	20	3/4	-12	19,1	3/4x14	88	51	53	32
3B282-12-12B	20	3/4	-12	19,1	3/4x14	88	51	53	32
3B282-16-16-K	25	1	-16	25,4	1x11	99	61	68	41

Material: Steel, zinc plated
B: Nipple: Brass, Nut: Steel

HANLEY CONTROLS
CLONMEL
www.hccl.ie

Information about standard products or non-standard products can be found in the current price list.
Dimensions shown may be changed at any time without prior notice.

D9 – Male BSP Parallel Pipe – Rigid – Straight (60° Cone)

BS5200 – AGR

Approved fitting series for hose types:

82 — 801 / 804 / 821FR / 830M / 831 / 836 / 837BM / 837PU-Plus / 838M

Part Number (XXXX.XX.XX) 82	Hose I.D. DN	Inch	Size	mm	Thread BSP	A mm	B mm	H mm
3D982-2-4	6	1/4	-4	6,3	1/8x28	36	17	14
3D982-4-4	6	1/4	-4	6,3	1/4x19	41	23	19
3D982-4-4B	6	1/4	-4	6,3	1/4x19	41	23	19
3D982-4-6	10	3/8	-6	9,5	1/4x19	44	21	19
3D982-4-6B	10	3/8	-6	9,5	1/4x19	44	21	19
3D982-6-6	10	3/8	-6	9,5	3/8x19	45	23	22
3D982-6-6B	10	3/8	-6	9,5	3/8x19	45	23	22
3D982-8-8	12	1/2	-8	12,7	1/2x14	53	27	27
3D982-8-8B	12	1/2	-8	12,7	1/2x14	53	27	27
3D982-10-10	16	5/8	-10	15,9	5/8x14	65	28	30
3D982-10-10B	16	5/8	-10	15,9	5/8x14	65	28	30
3D982-12-12	20	3/4	-12	19,1	3/4x14	65	28	32
3D982-12-12B	20	3/4	-12	19,1	3/4x14	65	28	32

Material: Steel, zinc plated
B: Brass

HANLEY CONTROLS
CLONMEL
www.hccl.ie

Information about standard products or non-standard products can be found in the current price list.
Dimensions shown may be changed at any time without prior notice.

91 – Male BSP Taper Pipe – Rigid – Straight

BS5200 – AGR-K

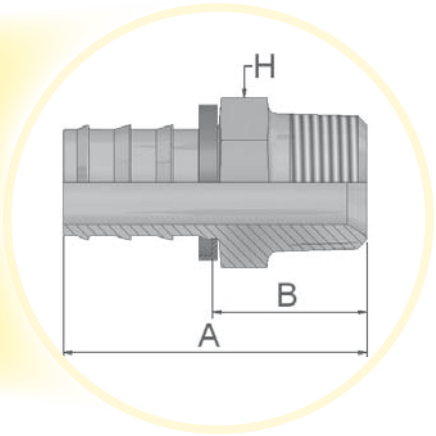

Approved fitting series for hose types:

82 — 801 / 804 / 821FR / 830M / 831 / 836 / 837BM / 837PU-*Plus* / 838M

Part Number (82)	Hose I.D. DN	Inch	Size	mm	Thread BSP	A mm	B mm	H mm
39182-2-4B	6	1/4	-4	6,3	1/8x28	37	18	12
39182-2-4	6	1/4	-4	6,3	1/8x28	37	18	12
39182-4-4	6	1/4	-4	6,3	1/4x19	40	21	14
39182-4-4B	6	1/4	-4	6,3	1/4x19	40	21	14
39182-4-6	10	3/8	-6	9,5	1/4x19	44	21	14
39182-4-6B	10	3/8	-6	9,5	1/4x19	44	21	14
39182-6-6	10	3/8	-6	9,5	3/8x19	45	22	19
39182-6-6B	10	3/8	-6	9,5	3/8x19	45	22	19
39182-6-8B	12	1/2	-8	12,7	3/8x19	49	22	19
39182-8-8	12	1/2	-8	12,7	1/2x14	55	29	22
39182-8-8B	12	1/2	-8	12,7	1/2x14	55	29	22
39182-8-10B	16	5/8	-10	15,9	1/2x14	65	28	22
39182-12-10B	16	5/8	-10	15,9	3/4x14	68	31	27
39182-12-12	20	3/4	-12	19,1	3/4x14	68	31	27
39182-12-12B	20	3/4	-12	19,1	3/4x14	68	31	27
39282-16-16B	25	1	-16	25,4	1x11	74	38	36

Material: Steel, zinc plated
B: Brass

HANLEY CONTROLS
CLONMEL
www.hccl.ie

Information about standard products or non-standard products can be found in the current price list.
Dimensions shown may be changed at any time without prior notice.

34 – Inch Standpipe (Brass)

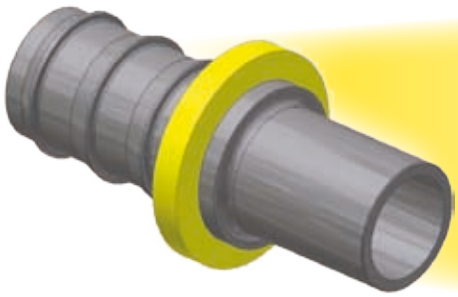

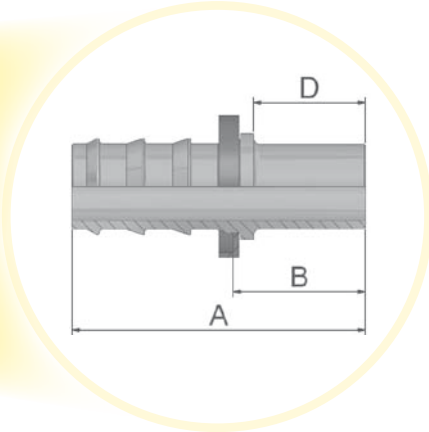

Approved fitting series for hose types:

XXXX-XX-XX Part Number 82	Hose I.D.				Tube A.D.	A	B	D
	DN	Inch	Size	mm	Inch	mm	mm	mm
33482-4-4B	6	1/4	-4	6,3	1/4	48	29	26
33482-6-6B	10	3/8	-6	9,5	3/8	57	34	31
33482-8-8B	12	1/2	-8	12,7	1/2	55	28	25
33482-10-10B	16	5/8	-10	15,9	5/8	67	30	25
33482-12-12B	20	3/4	-12	19,1	3/4	67	30	25

Material: Brass (B)

HANLEY CONTROLS
CLONMEL
www.hccl.ie

Information about standard products or non-standard products can be found in the current price list.
Dimensions shown may be changed at any time without prior notice.

01 – Male NPTF Pipe – Rigid – Straight

SAE J476A / J516

HANLEY CONTROLS
CLONMEL
www.hccl.ie

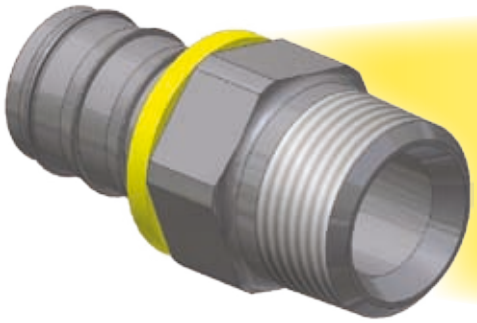

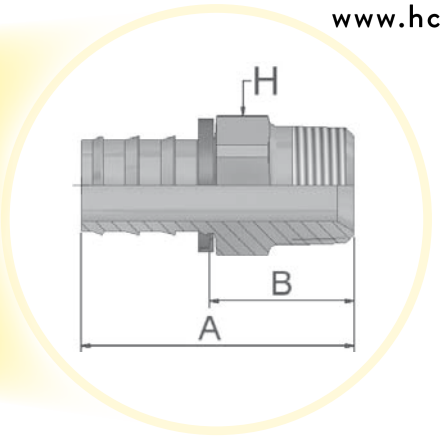

Approved fitting series for hose types:

82 — 801 / 804 / 821FR / 830M / 831 / 836 / 837BM / 837PU-Plus / 838M

Part Number 82	Hose I.D. DN	Hose I.D. Inch	Hose I.D. Size	Hose I.D. mm	Thread NPTF	A mm	B mm	H Inch
30182-2-4	6	1/4	-4	6,3	1/8x27	35	16	7/16
30182-2-4B	6	1/4	-4	6,3	1/8x27	35	16	7/16
30182-2-4-SM	6	1/4	-4	6,3	1/8x27	35	16	12
30182-4-4	6	1/4	-4	6,3	1/4x18	40	21	9/16
30182-4-4-SM	6	1/4	-4	6,3	1/4x18	40	21	14
30182-4-4B	6	1/4	-4	6,3	1/4x18	40	21	9/16
30182-4-4C	6	1/4	-4	6,3	1/4x18	40	21	9/16
30182-8-4C	6	1/4	-4	6,3	1/2x14	48	29	7/8
30182-4-6	10	3/8	-6	9,5	1/4x18	45	22	9/16
30182-4-6B	10	3/8	-6	9,5	1/4x18	45	22	9/16
30182-4-6-SM	10	3/8	-6	9,5	1/4x18	45	22	14
30182-6-6	10	3/8	-6	9,5	3/8x18	45	22	11/16
30182-6-6B	10	3/8	-6	9,5	3/8x18	45	22	11/16
30182-6-6-SM	10	3/8	-6	9,5	3/8x18	45	22	22
30182-6-6C	10	3/8	-6	9,5	3/8x18	45	23	11/16
30182-8-6-SM	10	3/8	-6	9,5	1/2x14	52	29	22
30182-8-6B-SM	10	3/8	-6	9,5	1/2x14	52	29	22
30182-6-8	12	1/2	-8	12,7	3/8x18	49	22	11/16
30182-6-8B	12	1/2	-8	12,7	3/8x18	49	22	11/16
30182-8-8	12	1/2	-8	12,7	1/2x14	55	29	7/8
30182-8-8B	12	1/2	-8	12,7	1/2x14	55	29	7/8
30182-8-8B-SM	12	1/2	-8	12,7	1/2x14	55	29	22
30182-8-8C	12	1/2	-8	12,7	1/2x14	55	29	7/8
30182-8-10-SM	16	5/8	-10	15,9	1/2x14	66	29	22
30182-8-10B	16	5/8	-10	15,9	1/2x14	66	29	7/8
30182-8-12-SM	20	3/4	-12	19,1	1/2x14	66	29	22
30182-8-12B	20	3/4	-12	19,1	1/2x14	66	29	7/8
30182-12-12	20	3/4	-12	19,1	3/4x14	66	29	1-1/16
30182-12-12C	20	3/4	-12	19,1	3/4x14	66	29	1-1/16
30182-12-12B	20	3/4	-12	19,1	3/4x14	66	29	1-1/16

Material:
Steel, zinc plated
B: Brass
C:
Stainless Steel
SM:
Metric Hexagon

Information about standard products or non-standard products can be found in the current price list.
Dimensions shown may be changed at any time without prior notice.

13 – Male NPTF Pipe Swivel

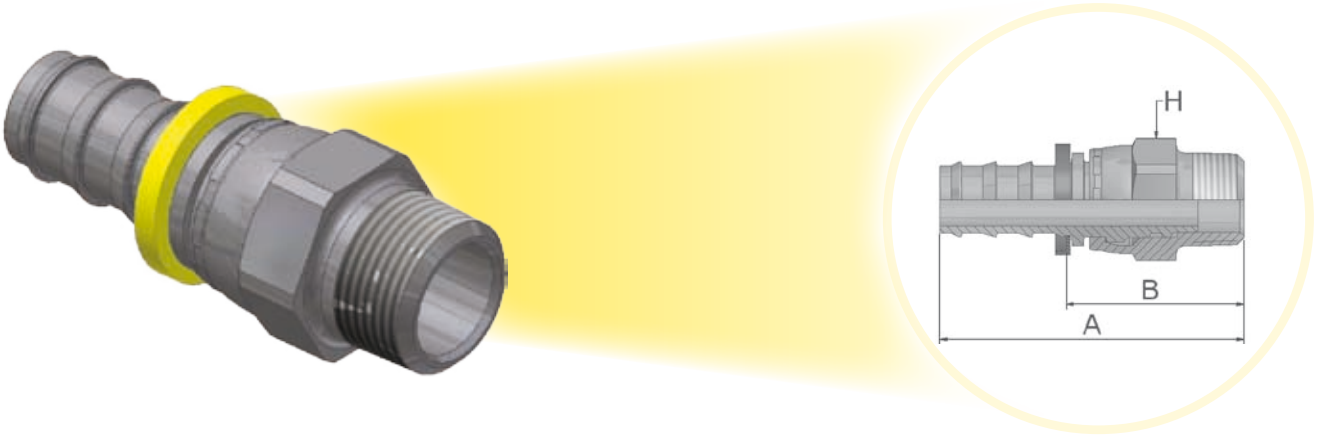

Approved fitting series for hose types:

82 — 801 / 804 / 821FR / 830M / 831 / 836 / 837BM / 837PU-Plus / 838M

Part Number (82)	Hose I.D. DN	Hose I.D. Inch	Hose I.D. Size	Hose I.D. mm	Thread NPTF	A mm	B mm	H Inch
31382-4-4	6	1/4	-4	6,3	1/4x18	41	22	9/16
31382-4-6	10	3/8	-6	9,5	1/4x18	45	23	11/16
31382-6-6	10	3/8	-6	9,5	3/8x18	45	23	11/16
31382-8-8	12	1/2	-8	12,7	1/2x14	56	29	7/8
31382-12-12	20	3/4	-12	19,1	3/4x14	94	58	1-1/4

Material: Steel, zinc plated
Note: This fitting allows for minor movement under pressure to relieve the torsion on hose, but it is not to be used for continuous or extreme swiveling.
Note: O-Ring is not compatible with Phosphate Ester Fluids.

HANLEY CONTROLS
CLONMEL
www.hccl.ie

Information about standard products or non-standard products can be found in the current price list.
Dimensions shown may be changed at any time without prior notice.

02 – Female NPTF Pipe – Rigid – Straight

SAE J476A / J516

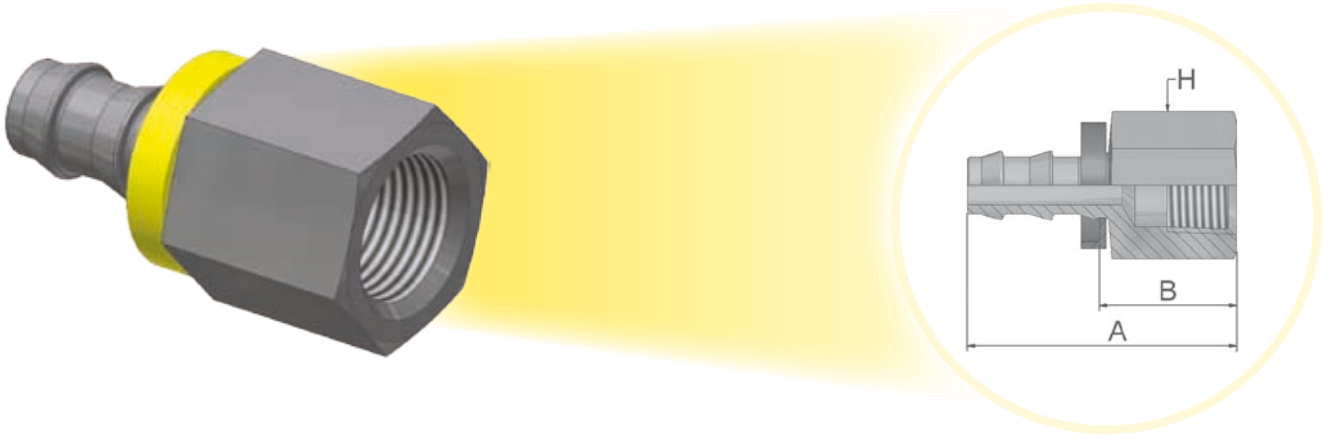

Approved fitting series for hose types:

82 — 801 / 804 / 821FR / 830M / 831 / 836 / 837BM / 837PU-*Plus* / 838M

Part Number (82)	Hose I.D. DN	Inch	Size	mm	Thread NPTF	A mm	B mm	H Inch
30282-4-4B	6	1/4	-4	6,3	1/4x18	40	21	3/4
30282-4-4C-SM	6	1/4	-4	6,3	1/4x18	40	21	19
30282-6-6B	10	3/8	-6	9,5	3/8x18	46	23	7/8
30282-8-8C	12	1/2	-8	12,7	1/2x14	55	28	1-1/16
30282-8-8B	12	1/2	-8	12,7	1/2x14	55	28	1-1/16

Material: Steel, zinc plated
B = Brass
C = Stainless Steel
K = Without plastic ring
SM = Metric Hexagon

HANLEY CONTROLS
CLONMEL
www.hccl.ie

Information about standard products or non-standard products can be found in the current price list.
Dimensions shown may be changed at any time without prior notice.

03 – Male JIC 37° – Rigid – Straight

ISO12151-5-S – AGJ

Approved fitting series for hose types:

82 — 801 / 804 / 821FR / 830M / 831 / 836 / 837BM / 837PU-*Plus* / 838M

XXXX.XX.XX Part Number 82	Hose I.D. DN	Inch	Size	mm	Thread UNF	A mm	B mm	H Inch
30382-4-4	6	1/4	-4	6,3	7/16x20	40	21	1/2
30382-4-4B	6	1/4	-4	6,3	7/16x20	40	21	12
30382-6-6	10	3/8	-6	9,5	9/16x18	45	22	5/8
30382-6-6B	10	3/8	-6	9,5	9/16x18	45	22	5/8
30382-8-8	12	1/2	-8	12,7	3/4x16	52	26	3/4
30382-8-8B	12	1/2	-8	12,7	3/4x16	52	26	3/4
30382-12-12	20	3/4	-12	19,1	1-1/16x12	69	32	1-1/8
30382-12-12B	20	3/4	-12	19,1	1-1/16x12	69	32	1-1/8

Material: Steel, zinc plated
B: Brass

HANLEY CONTROLS
CLONMEL
www.hccl.ie

Information about standard products or non-standard products can be found in the current price list.
Dimensions shown may be changed at any time without prior notice.

06/68 – Female – JIC 37° / SAE 45° Dual Flare – Swivel – Straight

ISO12151-5-SWS – DKJ

HANLEY CONTROLS
CLONMEL
www.hccl.ie

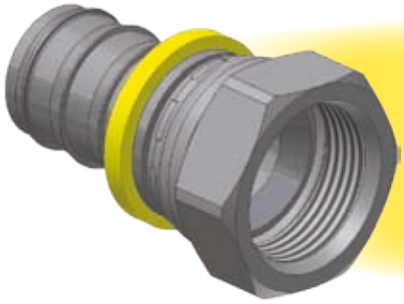

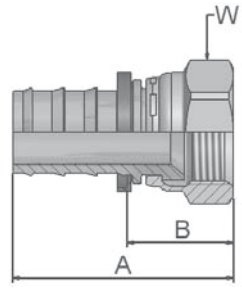

Approved fitting series for hose types:

82 — 801 / 804 / 821FR / 830M / 831 / 836 / 837BM / 837PU-Plus / 838M

Part Number 82	Hose I.D. DN	Inch	Size	mm	Thread UNF	A mm	B mm	W Inch
30682-4-4	6	1/4	-4	6,3	7/16x20	39	19	9/16
30682-4-4-SM	6	1/4	-4	6,3	7/16x20	40	21	14
30682-4-4B	6	1/4	-4	6,3	7/16x20	39	19	9/16
30682-4-4C	6	1/4	-4	6,3	7/16x20	39	19	9/16
30682-5-4	6	1/4	-4	6,3	1/2x20	40	21	5/8
30682-5-4B	6	1/4	-4	6,3	1/2x20	40	21	5/8
36882-5-4C-SM	6	1/4	-4	6,3	1/2x20	40	21	17
30682-6-4B	6	1/4	-4	6,3	9/16x18	42	22	11/16
30682-5-6B	10	3/8	-6	9,5	1/2x20	44	21	5/8
30682-6-6	10	3/8	-6	9,5	9/16x18	46	22	11/16
30682-6-6-SM	10	3/8	-6	9,5	9/16x18	45	22	19
30682-6-6B-SM	10	3/8	-6	9,5	9/16x18	45	22	19
30682-6-6C	10	3/8	-6	9,5	9/16x18	46	22	11/16
30682-6-6C-SM	10	3/8	-6	9,5	9/16x18	45	22	19
30682-8-6B	10	3/8	-6	9,5	3/4x16	47	24	7/8
36882-8-6-SM	10	3/8	-6	9,5	3/4x16	48	25	22
36882-8-6C-SM	10	3/8	-6	9,5	3/4x16	48	25	22
30682-8-8	12	1/2	-8	12,7	3/4x16	51	25	7/8
30682-8-8B	12	1/2	-8	12,7	3/4x16	51	25	7/8
30682-10-8B	12	1/2	-8	12,7	7/8x14	52	25	1
30682-10-8-SM	12	1/2	-8	12,7	7/8x14	65	28	27
30682-10-10	6	5/8	-10	15,9	7/8x14	52	25	1
30682-10-10-SM	16	5/8	-10	15,9	7/8x14	65	28	27
30682-10-10B	16	5/8	-10	15,9	7/8x14	62	25	1
36882-10-10C-SM	16	5/8	-10	15,9	7/8x14	65	28	27
30682-12-12	20	3/4	-12	19,1	1-1/16x12	67	30	1-1/4
30682-12-12-SM	20	3/4	-12	19,1	1-1/16x12	67	30	32
30682-12-12B	20	3/4	-12	19,1	1-1/16x12	67	30	1-1/4
30682-12-12B-SM	20	3/4	-12	19,1	1-1/16x12	67	30	32
30682-12-12C	20	3/4	-12	19,1	1-1/16x12	67	30	1-1/4
30682-12-12C-SM	20	3/4	-12	19,1	1-1/16x12	67	30	32
30682-16-16-SM	25	1	-16	25,4	1-5/16x12	70	33	41
30682-16-16C-SM	25	1	-16	25,4	1-5/16x12	70	33	41

Material:
Steel, zinc plated
C:
Material:
Stainless Steel
SM:
Metric Hexagon

Information about standard products or non-standard products can be found in the current price list.
Dimensions shown may be changed at any time without prior notice.

37/3V – Female JIC 37° /SAE 45° – Dual Flare – Swivel Female 45° Elbow

ISO 12151-5-SWE 45 – DKJ 45°

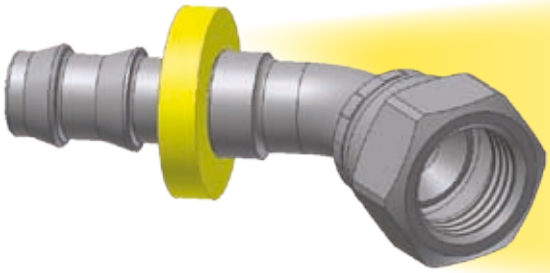

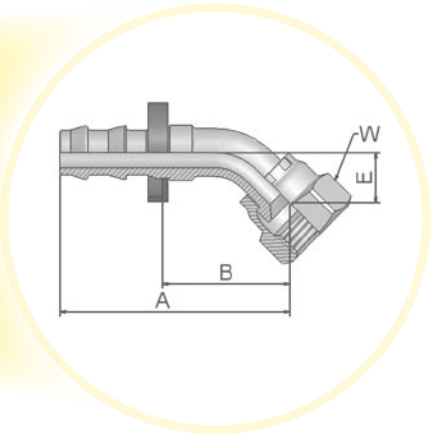

Approved fitting series for hose types:

82 — 801 / 804 / 821FR / 830M / 831 / 836 / 837BM / 837PU-Plus / 838M

Part Number 82	Hose I.D. DN	Inch	Size	mm	Thread UNF	A mm	B mm	E mm	W Inch
33782-4-4	6	1/4	-4	6,3	7/16x20	39	20	8	9/16
33V82-4-4B-SM	6	1/4	-4	6,3	7/16x20	44	25	10	17
33782-6-6	10	3/8	-6	9,5	9/16x18	53	30	10	11/16
33782-6-6-SM	10	3/8	-6	9,5	9/16x18	51	28	11	19
33782-8-8	12	1/2	-8	12,7	3/4x16	54	35	14	7/8

Material: Steel, zinc plated
B: Brass
SM: Metric Hexagon

HANLEY CONTROLS
CLONMEL
www.hccl.ie

Information about standard products or non-standard products can be found in the current price list.
Dimensions shown may be changed at any time without prior notice.

39/3W – Female JIC 37° / SAE 45° – Dual Flare – Swivel Female 90° Elbow

ISO 12151-5-SWES – DKJ 90°

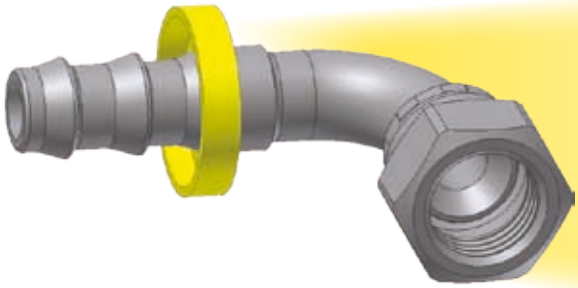

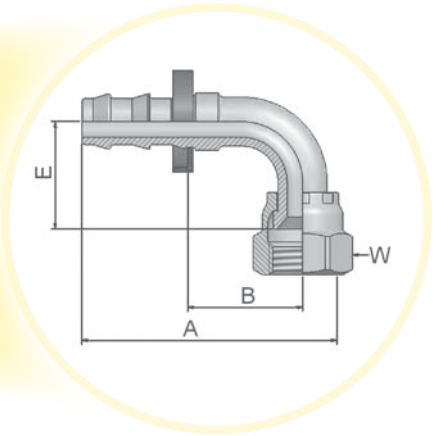

Approved fitting series for hose types:

82 — 801 / 804 / 821FR / 830M / 831 / 836 / 837BM / 837PU-*Plus* / 838M

Part Number 82	Hose I.D. DN	Inch	Size	mm	Thread UNF	A mm	B mm	E mm	W Inch
33982-4-4	6	1/4	-4	6,3	7/16x20	39	20	17	5/8
33W82-4-4C-SM	6	1/4	-4	6,3	7/16x20	39	20	21	17
33982-6-6	10	3/8	-6	9,5	9/16x18	50	28	22	11/16
33982-6-6-SM	10	3/8	-6	9,5	9/16x18	47	25	23	19
33982-6-6C-SM	10	3/8	-6	9,5	9/16x18	47	25	23	19
33982-8-8	12	1/2	-8	12,7	3/4x16	59	33	28	7/8
33W82-8-8-SM	12	1/2	-8	12,7	3/4x16	55	29	28	22
33982-10-10	16	5/8	-10	15,9	7/8x14	74	37	31	1
33982-12-12	20	3/4	-12	19,1	1-1/16x12	84	46	46	1-1/4
33982-12-12-SM	20	3/4	-12	19,1	1-1/16x12	83	46	48	32

Material: Steel, zinc plated
C: Material: Stainless Steel
SM: Metric Hexagon

HANLEY CONTROLS
CLONMEL
www.hccl.ie

Information about standard products or non-standard products can be found in the current price list.
Dimensions shown may be changed at any time without prior notice.

08 – Female SAE 45° Swivel

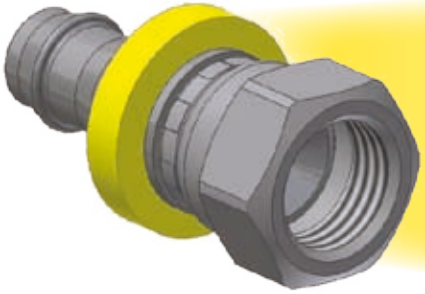

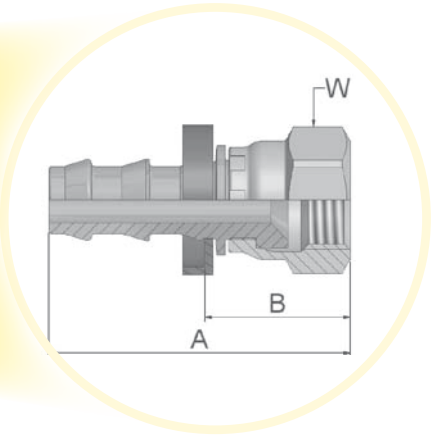

Approved fitting series for hose types:

82 — 801 / 804 / 821FR / 830M / 831 / 836 / 837BM / 837PU-Plus / 838M

XXXX.XX.XX Part Number 82	Hose I.D. DN	Inch	Size	mm	Thread UNF	A mm	B mm	W Inch
30882-4-4	6	1/4	-4	6,3	7/16x20	39	19	9/16
30882-4-4B	6	1/4	-4	6,3	7/16x20	39	19	9/16
30882-5-4B	6	1/4	-4	6,3	1/2x20	40	21	5/8
30882-6-6	10	3/8	-6	9,5	5/8x18	46	23	3/4
30882-6-6B	10	3/8	-6	9,5	5/8x18	46	23	3/4
30882-8-8	12	1/2	-8	12,7	3/4x16	51	25	7/8
30882-8-8B	12	1/2	-8	12,7	3/4x16	51	25	7/8
30882-10-10	16	5/8	-10	15,9	7/8x14	65	28	1
30882-10-10B	16	5/8	-10	15,9	7/8x14	65	28	1
30882-12-12	20	3/4	-12	19,1	1-1/16x14	67	30	1-1/4
30882-12-12B	20	3/4	-12	19,1	1-1/16x14	67	30	1-1/4

Material: Steel, zinc plated
B: Brass

HANLEY CONTROLS
CLONMEL
www.hccl.ie

Information about standard products or non-standard products can be found in the current price list.
Dimensions shown may be changed at any time without prior notice.

JC – Female ORFS – Swivel – Straight – Short

ISO 12151-1 – SWSA, SAE J516 – ORFS

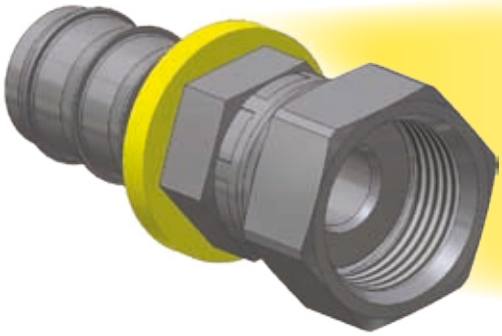

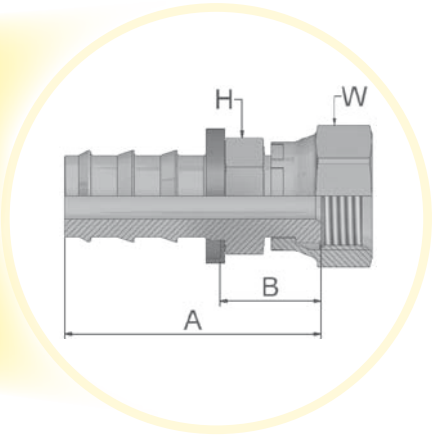

Approved fitting series for hose types:

82 — 801 / 804 / 821FR / 830M / 831 / 836 / 837BM / 837PU-*Plus* / 838M

Part Number 82	Hose I.D. DN	Hose I.D. Inch	Hose I.D. Size	Hose I.D. mm	Thread UNF	A mm	B mm	H Inch	W Inch
3JC82-4-4	6	1/4	-4	6,3	9/16x18	36	17	9/16	11/16
3JC82-6-6	10	3/8	-6	9,5	11/16x16	40	18	11/16	13/16
3JC82-6-6-SM	10	3/8	-6	9,5	11/16x16	41	18	19	22
3JC82-8-6-SM	10	3/8	-6	9,5	13/16x16	43	20	22	24
3JC82-8-8	12	1/2	-8	12,7	13/16x16	47	20	22	15/16
3JC82-8-8-SM	12	1/2	-8	12,7	13/16x16	47	20	22	24
3JC82-8-10	16	5/8	-10	15,9	13/16x16	57	21	3/4	15/16
3JC82-8-10-SM	16	5/8	-10	15,9	13/16x16	57	21	22	24
3JC82-10-10	16	5/8	-10	15,9	1x14	61	24	15/16	1-1/8
3JC82-10-12	20	3/4	-12	19,1	1x14	61	24	1	1-1/8
3JC82-12-12	20	3/4	-12	19,1	1-3/16x12	67	30	1-1/8	1-3/8

Material: Steel, zinc plated
SM: Metric Hexagon

HANLEY CONTROLS
CLONMEL
www.hccl.ie

Information about standard products or non-standard products can be found in the current price list.
Dimensions shown may be changed at any time without prior notice.

FF – Metru-Lok Swivel Female

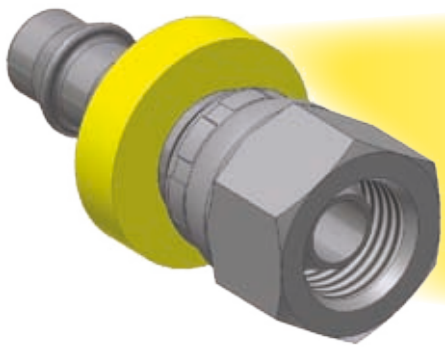

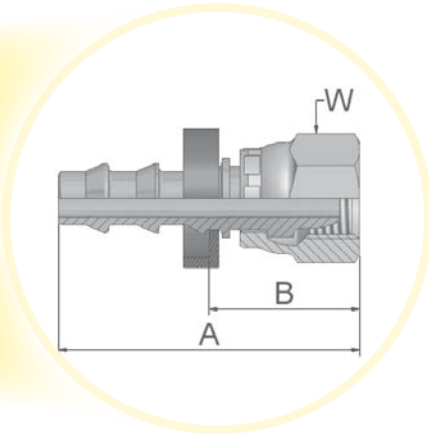

Approved fitting series for hose types:

82 801 / 804 / 821FR / 830M / 831 / 836 / 837BM / 837PU-Plus / 838M

Part Number 82	Hose I.D. DN	Inch	Size	mm	Thread metric	Tube O.D. mm	A mm	B mm	W mm
3FF82-6-4B	6	1/4	-4	6,3	M10x1	6	36	16	14
3FF82-8-4B	6	1/4	-4	6,3	M12x1	8	31	12	14
3FF82-10-6B	10	3/8	-6	9,5	M14x1	10	35	12	17
3FF82-12-6B	10	3/8	-6	9,5	M16x1	12	35	12	19
3FF82-14-8B	12	1/2	-8	12,7	M18x1	14	38	12	22
3FF82-16-8B	12	1/2	-8	12,7	M22x1,5	16	38	12	24
3FF82-18-10B	16	5/8	-10	15,9	M24x1,5	18	51	15	27
3FF82-22-12B	20	3/4	-12	19,1	M28x1,5	22	51	15	32

Material: Brass (B)

HANLEY CONTROLS
CLONMEL
www.hccl.ie

Information about standard products or non-standard products can be found in the current price list.
Dimensions shown may be changed at any time without prior notice.

AF – Male BSP Parallel Pipe – Rigid – Straight (with O-Ring Seal)

Approved fitting series for hose types:

82 — 801 / 804 / 821FR / 830M / 831 / 836 / 837BM / 837PU-*Plus* / 838M

Part Number (XXXX-XX-XX) 82	Hose I.D. DN	Inch	Size	mm	Thread BSP	A mm	B mm	W mm
3AF82-2-4B	6	1/4	-4	6,3	1/8x28	34	15	17
3AF82-4-4B	6	1/4	-4	6,3	1/4x19	39	20	19
3AF82-4-4C	6	1/4	-4	6,3	1/4x19	39	20	19
3AF82-4-6B	10	3/8	-6	9,5	1/4x19	43	20	19
3AF82-6-6B	10	3/8	-6	9,5	3/8x19	46	23	22
3AF82-6-8B	12	1/2	-8	12,7	3/8x19	49	22	22
3AF82-8-8B	12	1/2	-8	12,7	1/2x14	53	26	27
3AF82-8-10B	16	5/8	-10	15,9	1/2x14	63	26	27

Material: Brass (B)
C: Material: Stainless Steel

HANLEY CONTROLS
CLONMEL
www.hccl.ie

Information about standard products or non-standard products can be found in the current price list.
Dimensions shown may be changed at any time without prior notice.

NM – Male BSP Parallel Pipe – L Series – Rigid – Straight – ED-Seal

ISO 1179

Approved fitting series for hose types:

82 — 801 / 804 / 821FR / 830M / 831 / 836 / 837BM / 837PU-*Plus* / 838M

Part Number (82)	Hose I.D. DN	Inch	Size	mm	Thread BSP	A mm	B mm	W mm
3NM82-6-8B	12	1/2	-8	12,7	3/8x19	52	26	22
3NM82-8-8B	12	1/2	-8	12,7	1/2x14	55	28	27
3NM82-12-12B	20	3/4	-12	19,1	3/4x14	65	28	32

Material: Brass (B)
Hose fittings are delivered with ozone resistant Nitrile (NBR) O-Ring as a standard version. Working temperature from -30 °C up to +105 °C.
Hose fittings with special O-Rings (Viton or EPDM) available on request. For O-ring dimensions and part-numbers see Section Eb.

HANLEY CONTROLS
CLONMEL
www.hccl.ie

Information about standard products or non-standard products can be found in the current price list.
Dimensions shown may be changed at any time without prior notice.

YW – Male Standpipe – Rigid – Straight – A-Lok

Metric Size Tube O.D. with Vee Notch

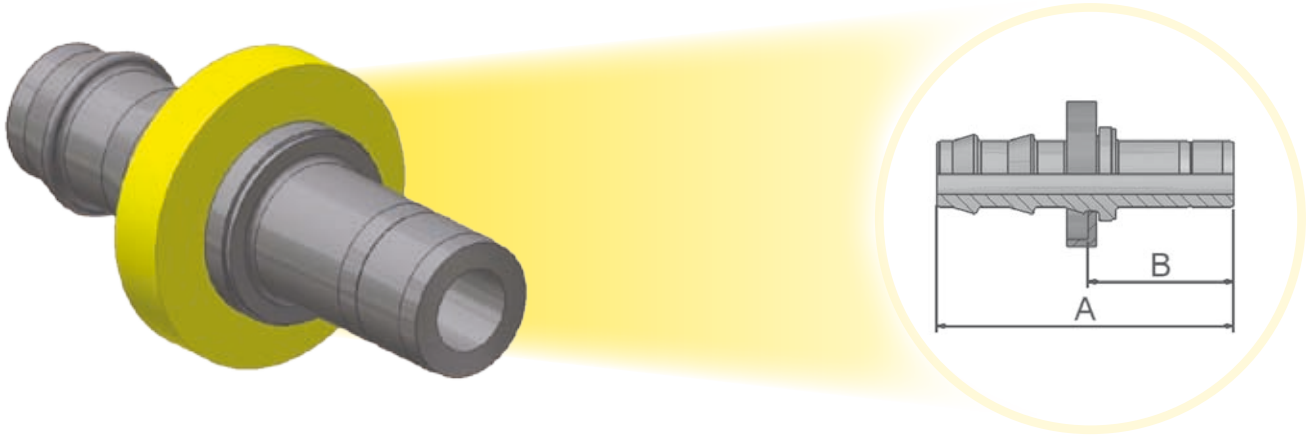

Approved fitting series for hose types:

Part Number (XXXX-XX-XX) 82	Hose I.D. DN	Inch	Size	mm	A mm	B mm
3YW82-6-4C-ROUND	6	1/4	-4	6,3	39	20
3YW82-8-4C-ROUND	6	1/4	-4	6,3	40	21
3YW82-10-6C-ROUND	10	3/8	-6	9,5	44	22
3YW82-12-8C-ROUND	12	1/2	-8	12,7	54	27
3YW82-18-10C-ROUND	16	5/8	-10	15,9	65	29

Material: Stainless Steel

HANLEY CONTROLS
CLONMEL
www.hccl.ie

Information about standard products or non-standard products can be found in the current price list.
Dimensions shown may be changed at any time without prior notice.

VW121 – BSP Swivel Female (VW-Norm 39-V-16631)

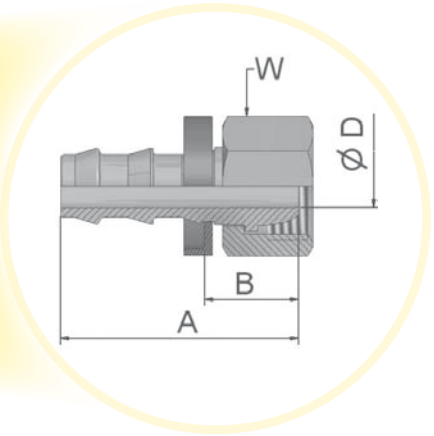

Approved fitting series for hose types:

Part Number (XXXX.XX.XX) 82	Hose I.D. DN	Inch	Size	mm	Thread BSP	A mm	B mm	D mm	W mm
VW121-8937*	6	1/4	-4	6,3	1/4x19	32	13	5	17
VW121-8938**	10	3/8	-6	9,5	3/8x19	38	15	7,5	19
VW121-8939**	14	1/2	-8	12,7	1/2x14	46	19	11	27
VW121-8940**	16	5/8	-10	15,9	3/4x14	58	21	14	32
VW121-8941**	20	3/4	-12	19,0	1x11	53	16	17	41

*stainless steel nipple, steel nut
**brass nipple, steel nut

HANLEY CONTROLS
CLONMEL
www.hccl.ie

Information about standard products or non-standard products can be found in the current price list.
Dimensions shown may be changed at any time without prior notice.

49 – Metric Banjo – Straight

DIN 7642

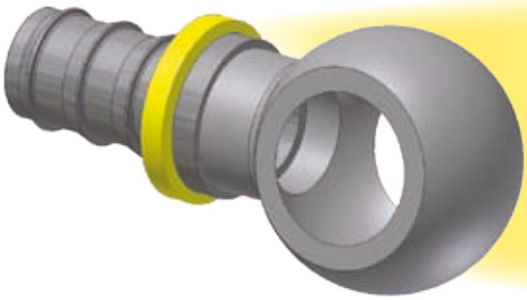

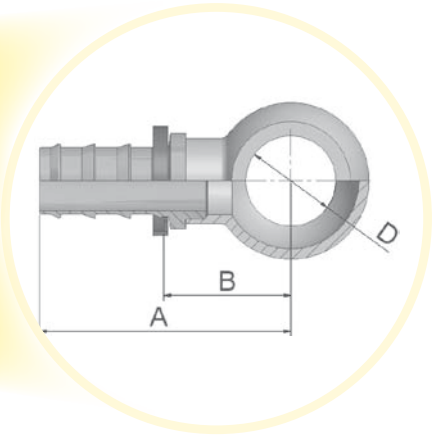

Approved fitting series for hose types:

82 — 801 / 804 / 821FR / 830M / 831 / 836 / 837BM / 837PU-*Plus* / 838M

XXXX-XX-XX Part Number 82	Hose I.D.				D	A	B
	DN	Inch	Size	mm	mm	mm	mm
34982-8-4	6	1/4	-4	6,3	8	36	17
34982-10-4	6	1/4	-4	6,3	10	38	19
34982-12-4	6	1/4	-4	6,3	12	40	21
34982-14-4	6	1/4	-4	6,3	14	42	23
34982-14-4C	6	1/4	-4	6,3	14	42	23
34982-10-6	10	3/8	-6	9,5	10	42	19
34982-12-6	10	3/8	-6	9,5	12	44	21
34982-14-6	10	3/8	-6	9,5	14	47	24
34982-14-6C	10	3/8	-6	9,5	14	47	24
34982-16-6	10	3/8	-6	9,5	16	49	26
34982-17-6	10	3/8	-6	9,5	17	49	26
34982-17-6C	10	3/8	-6	9,5	17	49	26
34982-14-8	12	1/2	-8	12,7	14	51	25
34982-18-8	12	1/2	-8	12,7	18	55	28
34982-22-8	12	1/2	-8	12,7	22	58	31
34982-22-10	16	5/8	-10	15,9	22	68	32
34982-26-12	20	3/4	-12	19,1	26	73	37

Material: Steel, zinc plated
C: Material: Stainless Steel

HANLEY CONTROLS
CLONMEL
www.hccl.ie

Information about standard products or non-standard products can be found in the current price list.
Dimensions shown may be changed at any time without prior notice.

82 – Push-Lok® Union

Approved fitting series for hose types:

XXXX-XX-XX Part Number 82	Hose I.D.				A
	DN	Inch	Size	mm	mm
38282-4-4	6	1/4	-4	6,3	45
38282-4-4B	6	1/4	-4	6,3	45
38282-6-6	10	3/8	-6	9,5	54
38282-6-6B	10	3/8	-6	9,5	54
38282-8-8	12	1/2	-8	12,7	64
38282-8-8B	12	1/2	-8	12,7	64
38282-10-10	16	5/8	-10	15,9	84
38282-10-10B	16	5/8	-10	15,9	84
38282-12-12	20	3/4	-12	19,0	84
38282-12-12B	20	3/4	-12	19,1	84

Material: Steel, zinc plated
B: Brass

HANLEY CONTROLS
CLONMEL
www.hccl.ie

Information about standard products or non-standard products can be found in the current price list.
Dimensions shown may be changed at any time without prior notice.

DP – Metric Swivel Female Tee / Male Stud

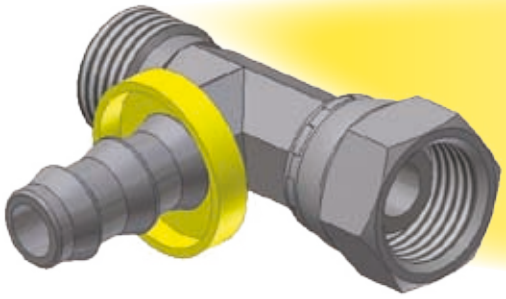

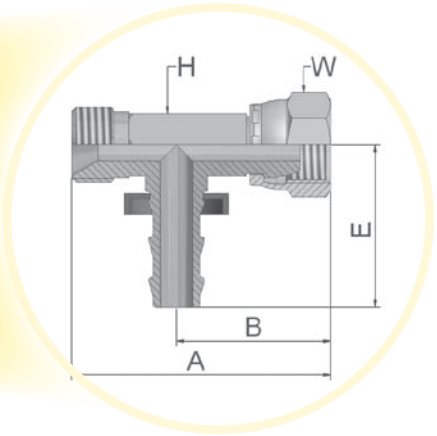

Approved fitting series for hose types:

82 — 801 / 804 / 821FR / 830M / 831 / 836 / 837BM / 837PU-*Plus* / 838M

Part Number 82	Hose I.D. DN	Inch	Size	mm	Thread metric	A mm	B mm	E mm	H mm	W mm
DP-6-6-4BK	6	1/4	-4	6,3	M12x1	43	24	30	11	14
DP-8-8-4BK	6	1/4	-4	6,3	M14x1,5	43	24	30	11	14
DP-10-10-6BK	10	3/8	-6	9,5	M16x1,5	48	26	34	13	19
DP-15-15-8BK	12	1/2	-8	12,7	M22x1,5	58	32	42	17	27

B & BK parts have brass nipples and steel nuts.
Standard nipples are stocked without plastic collar. If you need a collar, delete K from the part number.

HANLEY CONTROLS
CLONMEL
www.hccl.ie

Information about standard products or non-standard products can be found in the current price list.
Dimensions shown may be changed at any time without prior notice.

DR – Metric Swivel Female Tee

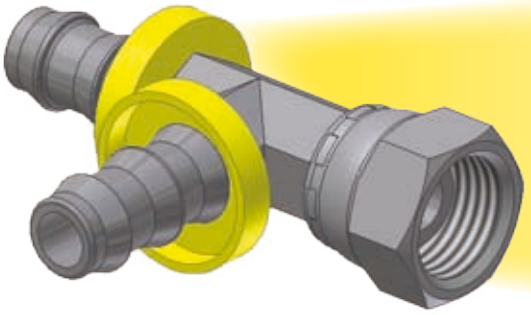

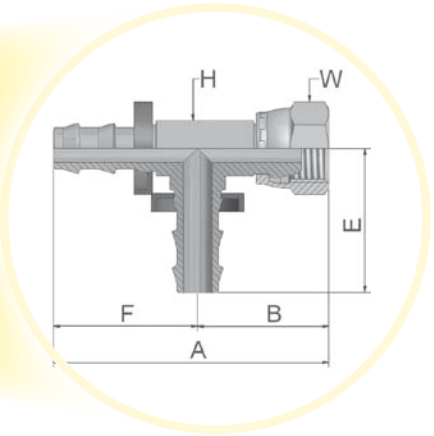

Approved fitting series for hose types:

82 — 801 / 804 / 821FR / 830M / 831 / 836 / 837BM / 837PU-Plus / 838M

Part Number (82)	Hose I.D. DN	Inch	Size	mm	Thread metric	A mm	B mm	E mm	F mm	H mm	W mm
DR-6-4-4BK	6	1/4	-4	6,3	M12x1	54	24	30	30	11	14
DR-10-6-6BK	10	3/8	-6	9,5	M16x1,5	59	25	34	34	13	19
DR-15-8-8BK	12	1/2	-8	12,7	M22x1,5	74	32	42	42	17	27

Material: Steel, zinc plated
B = Brass
C = Stainless Steel
K = Without plastic ring

HANLEY CONTROLS
CLONMEL
www.hccl.ie

Information about standard products or non-standard products can be found in the current price list.
Dimensions shown may be changed at any time without prior notice.

Assembly Instructions

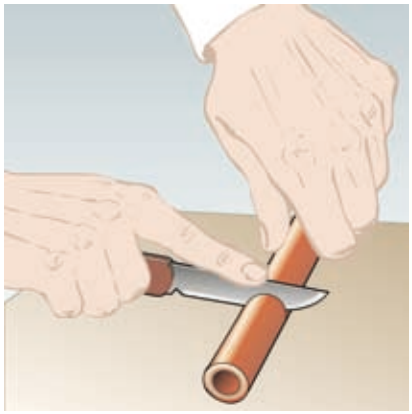

1. Cut the hose right angled with a sharp knife. If necessary it is possible to use a lubricant (water/ soap solution with 5 % soap fluid and 95 % water) for easy assembly.

2. Insert fitting into hose until first barb is in hose. Place end of fitting against a flat object (bench, door, wall) and grip hose approximately 1“ from end and push with a steady force until end of hose is covered by yellow plastic collar. Alternatively please use the Parker Assembly Tool No. 611050G.

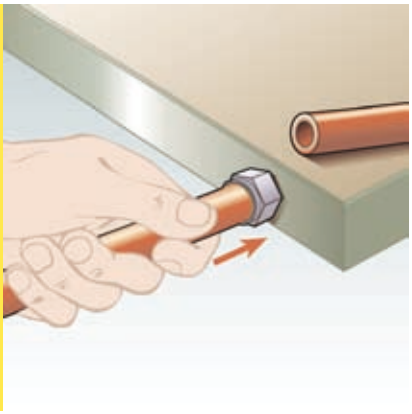

Attention!

During assembly, please keep in mind that Push-Lok fittings will provide an effective grip only when the Push-Lok hose is pushed fully on the insert, where the cropped end of the hose should be fully concealed by the plastic collar.
For easy assembly of hose 830M, 837BM and 837PU please use only Push-Lok Assembly Oil No. H896137.
Push-Lok Assembly Oil is free from wetting disturbing substances. Don’t use oil, lubricant or soap fluids for this hose!

Disassembly Instructions

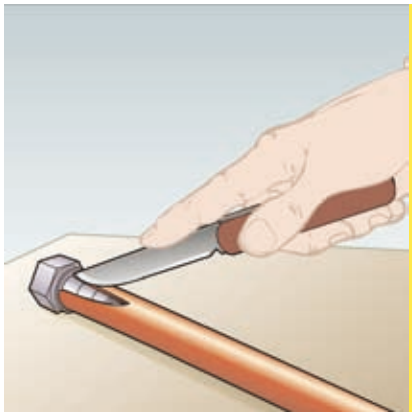

1. Cut lengthwise along a line at approximately a 20 angle from centre line of hose. The cut should be approximately 1” long. Be careful not to nick barbs when cutting the hose.

2. Grip hose and give a sharp down-ward tug to disengage from fitting.

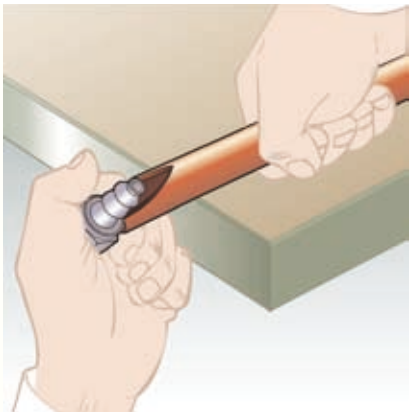

Attention!

Before re-use of the nipple please check nipple for damage. Damaged nipples can cause leakage.

Assembly Tool

Tool designed for assembly of Push-Lok ® fittings and hose in all sizes. Toggle actions greatly reduce effort necessary to hold hose and press in fitting. Only a few pounds of force is needed on either handle to quickly assemble any size.
Overall length: 320 mm, Weight: ca. 2,2 kg

Part-No.: 611050G

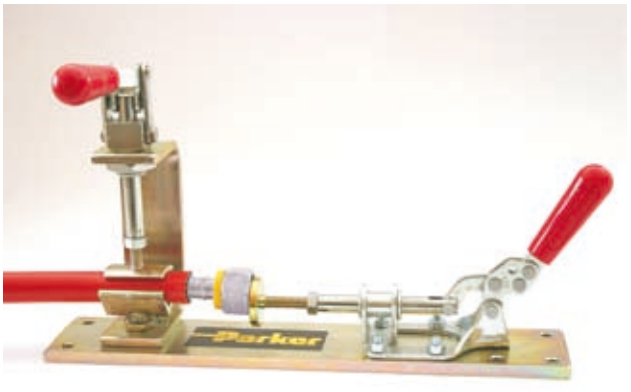

Push-Lok® Assembly Oil H896137

1-litre bottle Part-No.: H896137

Hose Selection by Medium and Hose Type

This hose compatibility chart is a ready reference of Parker hose compatibility with various fluid media. It is intended as a guide to chemical compatibility with inner tube materials and assembly lubricant applied internally. The specific recommendations are based upon field experience, the advice of various polymer or fluid suppliers, and specific laboratory experiments. It must be stressed, however, that this information is offered only as a guide. Final hose selection depends also upon pressure, fluid temperature, ambient temperature, and special requirements or variations, which may not be known by Parker Hannifin. Legal and other regulations applicable to footnotes must be followed with particular care. Where an external compatibility problem may occur, or for fluids not listed, we encourage you to first contact the fluid manufacturer for a recommendation prior to contacting your Parker Hannifin representative.

Use the Chart as Follows:

1. Locate medium to be carried.
2. Select suitability of hose and fitting material, using the Chemical Resistance Table on the following pages.
   See resistance rating key below for explanation of compatibility ratings.
3. The Column headings on the Chemical Resistance Table, refer to specific groups of hoses.
4. For fitting material availability refer to appropriate fitting selection of catalog.
5. Check hose specifications in this catalog. Contact Hose Division Technical Service Department on any items not cataloged.

Resistance Rating Key

A = Preferred, good to excellent with little or no change in physical properties.
F = Fair, marginal or conditional with noticeable affects on physical properties.
X = Unsuitable, severe affects on physical properties.
~ = No rating, insufficient information.

Numerals

(2) Legal and insurance regulations must be considered. Contact Technical Service Department for more information.

(3) Push-Lok hoses are not recommended for fuels

(5) Maximum 65 °C (150 °F)

(6) The hose resistance depends on medium concentration and temperature

(7) Recommended hose type for phosphate ester fluids: 804

(8) Acceptable for flushing hose assemblies

(10) For dry air applications the following hose types are recommended: 801, 804, 821FR, 830M, 837BM, 837PU.
Please take note of the temperatures for air unter paragraph „Temperature Range“ on the relevant catalogue page.

(11) Maximum 100 °C (212 °F)

(12) Maximum 121 °C (250 °F)

(15) Maximum 70 °C (145 °F) for hose types: 801, 837BM, 837PU

(16) No chemical resistance classification for the following hose types: 801, 831BM, 837PU

Medium	831	801 837BM 837PU 836 821FR	804	830M 838M	Steel	Brass	Stainless Steel
3M FC-75	A	A 16	A	A	A	A	A
Acetic Acid	X	A 16	6	X	X	X	A
Acetone	X	A 16	A	X	A	A	A
Acetylene	X	X	X	-	-	-	-
AEROSHELL Turbine Oil 500 (See MIL-L-23699)	F	X	X	-	A	A	A
Air	A	A	A	A	A	A	A
Air (dry)	F,10	A	A	A	A	A	A
Alcohol (Methanol-Ethanol)	F	A 16	F	-	F	A	A
Ammonia (Anhydrous)	X	X	X	-	X	X	X
Ammonium Chloride	A	A 16	A	A	X	X	X
Ammonium Hydroxide	F	A 16	A	X	F	X	A
Ammonium Nitrate	A	A 16	A	-	F	X	A
Ammonium Phosphate	A	A 16	A	-	X	X	F
Ammonium Sulfate	A	A 16	A	-	F	X	F
Amoco 32 Rykon	A	F 15	X	A	A	A	A
Ampol PE 46	X	X	A, 7	F	A	A	A
AMSOIL Synthetic ATF	A	A 16	X	F	A	A	A
Amyl Alcohol	X	A 16	F	-	X	A	A
Anderol 495,497,500,750	X	A 16	X	X	A	A	A
Aniline	X	A 16	A	X	A	X	A
Animal Fats	F	A 16	F	-	6	6	A
Aquacent Light, Heavy	A	X	X	A	A	A	A
Aromatic 100,150	F	-	X	F	A	A	A
Arrow 602P	A	A 15	X	A	A	A	A
Asphalt	F	F 15	X	A	F	F	A
ASTM #3 Oil	F	A 16	X	-	A	A	A
ATF-M	A	A 15	X	A	A	A	A
Automotive Brake Fluid	X	X	-	X	X	X	X
AW 32,46,68	A	A 15	X	A	A	A	A
BCF	F	F 16	-	-	A	A	A
Benz Petraulic 32,46,68,100,150,220,320,460	A	A 15	X	A	A	A	A
Benzene, Benzol	X	A 16	X	F	A	A	A
Benzgrind HP 15	A	A 16	X	-	A	A	A
Biodegradable Hydraulic Fluid 112B	A	X	-	-	A	A	A
Borax	F	A 16	A	-	F	A	A
Boric Acid	A	X	A	X	X	6	A
Brayco 882	A	A 16	X	-	A	A	A
Brayco Micronic 745	A	F 15	X	A	A	A	A
Brayco Micronic 776RP	A	F 15	X	A	A	A	A
Brayco Micronic 889	F	-	X	-	A	A	A
Brine	F	A 16	A	-	X	F	F
Butane	-	-	-	F	A	A	A
Butyl Alcohol, Butanol	F	A 16	F	-	F	F	A
Calcium Chloride	A	A 16	A	-	F	F	X
Calcium Hydroxide	A	A 16	A	-	A	A	A
Calcium Hypochlorite	X	A 16	A	-	X	F	X
Calibrating Fluid	A	A 15	X	A	A	A	A
Carbon Dioxide, gas	F	F 16	6	-	A	A	A
Carbon Disulfide	X	A 16	X	-	A	F	A
Carbon Monoxide (hot)	F	A 16	6	-	F	6	A
Carbon Tetrachloride	X	A 16	X	-	6	6	6
Carbonic Acid	F	X	F	X	X	X	F
Castor Oil	A	A 16	A	-	A	A	A
Castrol 5000	F	A 16	X	X	A	A	A
Cellosolve Acetate	X	X	A	-	X	X	A
Celluguard	A	-	A	-	A	A	A
Cellulube 90, 150, 220 300, 550, 1000	X	-	A	-	A	A	A
Chevron Clarity AW 32, 46, 68	A	A 15	X	A	A	A	A
Chevron FLO-COOL 180	F	-	X	-	A	A	A
Chevron FR-8, 10, 13, 20	X	X	A, 7	F	A	A	A
Chevron Hydraulic Oils AW MV 15, 32, 46, 68, 100	A	A 15	X	A	A	A	A
Chevron HyJet IV (9)	X	X	A, 7	F	A	A	A
Citric Acid	A	X	A	X	X	X	6
Commonwealth EDM 242, 244	A	-	X	A	A	A	A
CompAir CN300	X	A 16	X	X	A	A	A
CompAir CS100, 200, 300, 400	X	A 16	X	X	A	A	A
Coolanol 15, 20, 25, 35, 45	A	A 16	A	X	A	A	A
Copper Chloride	A	X	A	-	X	X	X
Copper Sulfate	A	X	A	-	X	X	F
Cosmolubric HF-122, HF-130, HF-144	A	X	X	-	A	A	A
Cosmolubric HF-1530	A	X	X	-	A	A	A
Cottonseed Oil	A	F 16	X	-	A	A	A
CPI CP-4000	X	A 16	X	-	A	A	A
Crude Petroleum Oil	A	A 15	X	A	F	F	A
CSS 1001Dairy Hydraulic Fluid	A	A 16	X	-	A	A	A
Daphne AW32	A	A 15	X	A	A	A	A
Dasco FR 201-A	A	-	X	-	A	A	A
Dasco FR150, 200, 310	A	-	A	-	A	A	A
Dasco FR300, FR2550	X	-	X	F	A	A	A
Dasco FR355-3	A	X	X	X	A	A	A
Deicer Fluid 419R	A	-	-	A	A	A	A
Deionized Water	A	A 16	A	-	F	F	A
Dexron II ATF	A	A 15	X	A	A	A	A
Dexron III ATF	F, 11	A 16, 12	X	-	A	A	A
Diesel Fuel	A, 3	A 16, 3	X	A(2)	A	A	A
Diester Fluids	X	A 16	X	X	A	A	A
Dow Corning 2-1802 Sullair (24KT)	-	F 16	-	-	A	A	A

Medium	831	801 837BM 837PU 836 821FR	804	830M 838M	Steel	Brass	Stainless Steel
Dow Corning DC 200, 510, 550, 560, FC126	A	A 16	-	-	A	A	A
Dow HD50-4	F	-	-	-	-	-	A
Dow Sullube 32	-	F 16	-	-	A	A	A
Dowtherm A,E	X	A 16	X	-	A	A	A
Dowtherm G	X	X	X	-	A	A	A
Duro AW-16, 31	A	-	X	-	A	A	A
Duro FR-HD	A	-	X	-	A	A	A
EcoSafe FR-68	A	-	X	X	A	A	A
Ethanol	F	A 16	F	-	F	A	A
Ethers	X	A 16	X	-	A	A	A
Ethyl Acetate	X	A 16	F	-	F	A	A
Ethyl Alcohol	F	A 16	F	-	F	A	A
Ethyl Cellulose	F	A 16	F	-	X	F	F
Ethyl Chloride	X	X	A	-	F	F	F
Ethylene Dichloride	X	A 16	X	-	X	A	X
Ethylene Glycol	A	A	A	A	A	F	A
Exxon 3110 FR	A	A 16	X	A	A	A	A
Exxon Esstic	A	A 15	A	A	A	A	A
Exxon Nuto H 46, 68	A	A 15	X	A	A	A	A
Exxon Tellura Indusrial Process Oils	A	A 15	X	A	A	A	A
Exxon Terresstic, EP	A	A 15	A	A	A	A	A
Exxon Turbo Oil 2380	F	A 16	X	X	A	A	A
Exxon Univolt 60, N61	A	A 15	X	A	A	A	A
FE 232 (Halon)	X	X	F	-	A	A	A
Fenso 150	A	-	X	A	A	A	A
Formaldehyde	X	A 16	A	-	X	F	A
Formic Acid	X	X	A	X	X	6	X
Freons see refrigerants	-	-	-	-	-	-	-
Fuel Oil	A	A 15	X	A	A	A	A
Fyre-Safe 120C,126,155,1090E,1150,1220,1300E	X	X	A, 7	F	A	A	A
Fyre-Safe 200C, 225, 211	A	A	A	F	A	A	A
Fyre-Safe W/O	A	A 16	X	A	A	A	A
Fyrguard 150, 150-M, 200	A	A	A	F	A	A	A
Fyrquel 60, 90, 150, 220, 300, 550, 1000	X	X	A, 7	F	A	A	A
Fyrquel EHC, GT, LT, VPF	X	X	A, 7	F	A	A	A
Fyrtek MF, 215, 290, 295	X	X	X	F	A	A	A
Gardner-Denver GD5000, GD8000	X	A 16	X	X	A	A	A
Gasoline	X	A 16	X	-	A	A	A
Gasoline	-	-	-	-	A	A	A
Glue	F	-	X	-	A	F	A
Glycerine, Glycerol	A	A 16	A	-	A	F	A
Grease	A	A 15	X	A	A	A	A
Gulf-FR Fluid P37, P40, P43, P45, P47	X	A 16	A	-	A	A	A
H-515 (NATO)	A	-	X	-	A	A	A
Halon 1211, 1301	F	F 16	-	-	A	A	A
Helium Gas	X	X	X	-	A	A	A
Heptane	F	A 16	X	-	A	A	A
Hexane	F	A 16	X	-	A	A	A
HF-20, HF-28	A	A	A	F	A	A	A
Houghto-Safe 1055, 1110, 1115, 1120, 1130 (9)	X	X	A, 7	F	A	A	A
Houghto-Safe 271 to 640	A	A	A	F	A	A	A
Houghto-Safe 419 Hydraulic Fluid	A	-	X	-	A	A	A
Houghto-Safe 419R Deicer Fluid	A	-	-	A	A	A	A
Houghto-Safe 5046, 5046W, 5047-F	A	A 16	X	-	A	A	A
HP 100C (Jack hammer oil)	A	A 15	X	A	A	A	A
HPWG 46B	A	A	-	F	A	A	A
Hul-E-Mul	A	-	X	-	A	A	A
Hychem C, EP1000, RDF	A	A 16	A	-	A	A	A
Hydra Safe E-190	A	A 16	X	-	A	A	A
Hydra-Cut 481, 496	A	-	X	-	A	A	A
Hydrafluid 760	A	-	X	-	A	A	A
Hydrochloric Acid	X	X	X	X	X	X	X
Hydrofluoric Acid	X	X	X	X	X	6	X
Hydrogen Gas	X	X	X	-	A	A	A
Hydrogen Peroxide	X	A 16	X	-	X	X	6
Hydrogen Sulfide	X	X	A	-	X	X	6
Hydrolube	A	A 16	A	-	A	A	A
Hydrolubric 120-B, 141, 595	A	A 16	A	-	A	A	A
Hydrosafe Glycol 200	A	A	A	F	A	F	A
HyJet IV	X	X	A, 7	-	A	A	A
Ideal Yellow 77	A	A 16	X	-	A	A	A
Imol S150 to S550	X	-	-	-	A	A	A
Ingersoll Rand SSR Coolant	X	A 16	X	X	A	A	A
Isocyanates	F	A 16	X	-	A	-	A
Isooctane	F	A 16	X	-	A	A	A
Isopar H	X	X	X	-	A	A	A
Isopropyl Alcohol	F	A 16	F	-	F	A	A
Jayflex DIDP	X	X	A	-	A	A	A
JP3 and JP4	A,3	-	X	A(2)	A	A	A
JP5	A,3	F 16,3	X	A(2)	A	A	A
JP9	X	X	X	-	A	-	A
Kaeser 150P, 175P, 325R, 687R	X	A 16	X	-	A	A	A
Kerosene	A	F 15	X	A	A	A	A
KSL-214, 219, 220, 222	X	A 16	X	-	A	A	A
Lacquer	X	A 16	X	-	X	A	A
Lacquer Solvents	X	A 16	X	-	X	A	A
Lactic Acids	X	X	X	X	X	X	A

Medium	831	801 837BM 837PU 836 821FR	804	830M 838M	Steel	Brass	Stainless Steel
Lindol HF	X	A 16	A	-	A	A	A
Linseed Oil	A	A 16	A	-	A	A	A
LP-Gas	-	-	-	-	A	A	A
Magnesium Chloride	A	A 16	A	-	X	X	X
Magnesium Hydroxide	F	A 16	A	-	F	F	F
Magnesium Sulfate	A	A 16	A	-	A	F	A
Mercaptans	X	X	X	-	-	-	-
Methane	-	-	-	-	A	A	A
Methanol	F	A 16	F	-	F	A	A
Methyl Alcohol	F	A 16	F	-	F	A	A
Methyl Chloride	X	A 16	X	-	A	A	A
Methyl Ethyl Ketone (MEK)	X	A 16	X	-	F	A	A
Methyl Isopropyl-Ketone	X	X	X	-	F	A	A
Metsafe FR303, FR310, FR315, FR330, FR350	X	X	X	F	A	A	A
Microzol-T46	A	-	X	-	A	A	A
MIL-B-46176A	X	X	X	-	X	X	X
MIL-H-46170	F	A 16	X	-	A	A	A
MIL-H-5606	A	A 15	X	A	A	A	A
MIL-H-6083	A	A 16	X	-	A	A	A
MIL-H-7083	A	A 16	X	-	A	A	A
MIL-H-83282	A	A 16	X	-	A	A	A
MIL-L-2104, 2104B	A	A 15	X	A	A	A	A
MIL-L-23699	X	X	X	X	A	A	A
MIL-L-7808	A	-	X	-	A	A	A
Mine Guard FR	A	-	A	-	A	A	A
Mineral Oil	A	F 15	X	A	A	A	A
Mineral Spirits	8	8	X	-	A	A	A
Mobil Aero HFE	A	F 15	X	A	A	A	A
Mobil DTE 11M, 13M, 15M, 16M, 18M, 19M	A	A 15	X	A	A	A	A
Mobil DTE 22, 24, 25, 26	A	A 15	X	A	A	A	A
Mobil EAL 224H	A	X	-	-	A	A	A
Mobil EAL Artic 10, 15, 22,32, 46, 68, 100	X	X	X	X	A	A	A
Mobil Glygoyle 11, 22, 30, 80	A	-	X	-	A	A	A
Mobil HFA	A	A 16	X	-	A	A	A
Mobil Jet 2	F	A 16	X	-	A	A	A
Mobil Nyvac 20, 30, 200, FR	A	A	A	F	A	A	A
Mobil Rarus 824, 826, 827	X	A 16	X	X	A	A	A
Mobil SHC 600 Series	A	A 16	X	-	A	A	A
Mobil SHC 800 Series	A	A 16	X	-	A	A	A
Mobil SHL 624	A	A 16	X	-	A	A	A
Mobil Vactra Oil	A	F 15	X	A	A	A	A
Mobil XRL 1618B	X	X	A, 7	F	A	A	A
Mobilfluid 423	A	A 15	X	A	A	A	A
Mobilgear SHC 150, 220, 320, 460, 680	F	A 16	X	-	A	A	A
Mobilrama 525	A	F 15	X	A	A	A	A
Molub-Alloy 890	X	A 16	X	-	A	A	A
Moly Lube „HF“ 902	F	F 15	X	A	A	A	A
Monolec 6120 Hydraulic Oil	A	A 15	X	A	A	A	A
Morpholine (pure additive)	X	X	X	-	X	X	A
Naptha	F	A 16	X	-	A	A	A
Napthalene	X	A 16	X	-	A	A	A
Natural Gas	-	-	-	-	A	A	A
Nitric Acid	X	X	X	X	X	X	F
Nitrobenzene	X	A 16	X	-	X	X	A
Nitrogen, gas	F	F 16	F	-	A	A	A
NORPAR 12, 13, 15	8	8	X	-	A	A	A
Nuto H 46, 68	A	A 15	X	A	A	A	A
Nyvac 20, 30, 200, FR	A	A	A	F	A	A	A
Nyvac Light	X	-	A	-	A	A	A
Oceanic HW	A	A	X	F	A	A	A
Oxygen, gas	X	X	X	-	X	A	A
Ozone	F	-	A	-	A	A	A
Pacer SLC 150, 300, 500, 700	X	A 16	X	-	A	A	A
Pennzbell AWX	A	F 15	X	A	A	A	A
Perchloroethylene	X	X	X	-	F	X	A
Petroleum Ether	F	F 15	X	A	A	A	A
Petroleum Oils	A	A 15	X	A	A	A	A
Phenol (Carbolic Acid)	X	A 16	X	X	X	F	A
Phosphate Ester Blends	X	X	X	F	A	A	A
Phosphate Esters	X	X	A, 7	-	A	A	A
Phosphoric Acid	X	X	X	X	X	X	F
Plurasafe P 1000, 1200	A	A	F	F	A	A	A
Polyalkylene Glycol	F	-	X	-	A	A	A
Polyol Ester	A	X	X	-	A	A	A
Potassium Chloride	A	A 16	A	-	X	F	F
Potassium Hydroxide	X	A 16	A	-	6	X	A
Potassium Sulfate	A	A 16	A	-	A	A	A
Propane	-	-	-	-	A	A	A
Propylene Glycol	A	A 16	A	-	F	F	F
Pydraul 10-E, 29-E, 50-E, 65-E, 90-E, 115-E	X	X	A, 7	F	A	A	A
Pydraul 230-C, 312-C, 68-S	X	X	A, 7	F	A	A	A
Pydraul 60, 150, 625, F9	X	X	A, 7	-	A	A	A
Pydraul 90, 135, 230, 312, 540, MC	X	X	X	-	A	A	A
Pydraul A-200	X	A 16	X	-	A	A	A
Pyro Gard 43, 230, 630	X	X	X	-	A	A	A
Pyro Gard C, D, R, 40S, 40W	A	F 16	X	A	A	A	A
Pyro Guard 53, 55, 51, 42	X	X	A, 7	-	A	A	A

Medium	831	801 837BM 837PU 836 821FR	804	830M 838M	Steel	Brass	Stainless Steel
Quintolubric 700	A	A 16	A	-	A	F	A
Quintolubric 807-SN	A	-	X	-	A	A	A
Quintolubric 822, 833	A, 5	X	X	X	A	A	A
Quintolubric 822-68EHC (71°C, 160°F maximum)	A, 5	-	-	-	A	A	A
Quintolubric 888	A, 5	X	X	-	A	A	A
Quintolubric 957, 958	A	A	A	F	A	A	A
Quintolubric N822-300	A	-	-	-	A	A	A
Rando	A	A 15	X	A	A	A	A
Rayco 782	A	X	X	-	X	X	X
Refrigerant 124	-	-	-	X	A	A	A
Refrigerant Freon 113, 114	X	X	X	X	A	A	A
Refrigerant Freon 12	-	X	-	X	A	A	A
Refrigerant Freon 22	-	X	-	X	A	A	A
Refrigerant Freon 502	-	X	-	X	A	A	A
Refrigerant HFC134A	-	X	-	X	A	A	A
Reolube Turbofluid 46	X	X	A, 7	-	A	A	A
Rotella	A	A 15	X	A	A	A	A
Royal Bio Guard 3032, 3046, 3068, 3100	A	X	X	X	A	A	A
Royco 2200, 2210, 2222, 2232, 2246, 2268	X	X	X	X	A	A	A
Royco 4032, 4068, 4100, 4150	X	A 16	X	X	A	A	A
Royco 756, 783	A	A 15	X	A	A	A	A
Royco 770	F	F 16	X	-	A	A	A
RTV Silicone Adhesive Sealants	X	X	X	-	A	A	A
Safco-Safe T10, T20	-	-	A	-	F	F	A
Safety-Kleen ISO 32, 46, 68 hydraulic oil	A	-	X	A	A	A	A
Safety-Kleen Solvent	8	8	X	-	A	A	A
Santoflex 13	F	-	F	-	A	A	A
Santosafe 300	X	-	X	-	A	A	A
Santosafe W/G 15 to 30	-	A 16	A	-	A	A	A
Sea Water	F	A 16	A	-	X	F	A
Sewage	F	A 16	F	-	X	F	A
Shell 140 Solvent	8	8	X	-	A	A	A
Shell Clavus HFC 68	X	X	X	X	A	A	A
Shell Comptella Oil	F	A 15	X	A	A	A	A
Shell Comptella Oil S 46, 68	F	A 15	X	A	A	A	A
Shell Comptella Oil SM	F	A 15	X	A	A	A	A
Shell Diala A, (R) Oil AX	A	F 15	X	A	A	A	A
Shell FRM	-	-	X	-	A	A	A
Shell IRUS 902, 905	A	-	A	-	A	A	A
Shell Pella-A	A	A 16	X	-	A	A	A
Shell Tellus	A	A 15	X	A	A	A	A
Shell Thermia Oil C	A	A 15	X	A	A	A	A
Shell Turbo R	F	A 16	X	X	A	A	A
SHF 220, 300, 450	A	X	X	X	A	A	A
Silicate Esters	F	A 16	X	-	A	A	A
Silicone Oils	A	-	-	-	A	A	A
Silicone Sealants	X	X	X	-	A	A	A
Skydrol 500B-4, LD-4	X	X	A, 7	F	A	A	A
Soap Solutions	F	F 16	A	-	A	A	A
Soda Ash, Sodium Carbonate	A	A 16	A	-	A	F	A
Sodium Bisulfate	F	A 16	A	-	F	A	F
Sodium Chloride	F	A 16	A	-	X	F	A
Sodium Hydroxide	X	A 16	A	-	A	X	A
Sodium Hypochlorite	F	X	F	-	X	X	X
Sodium Nitrate	F	A 16	A	-	A	F	A
Sodium Peroxide	X	X	A	-	X	X	A
Sodium Silicate	A	A 16	A	-	A	A	A
Sodium Sulfate	A	A 16	A	-	A	A	A
Soybean Oil	A	A 16	A	-	A	A	A
SSR Coolant	X	A 16	X	X	A	A	A
Steam	X	X	X	-	F	A	A
Stoddard Solvent	8	8	X	-	A	A	A
Sulfur Chloride	X	A 16	X	-	X	X	X
Sulfur Dioxide	X	X	F	-	X	F	F
Sulfur Trioxide	X	A 16	F	-	X	X	X
Sulfuric Acid (0% to 30% room temperture)	F, 6	X	F, 6	-	6	X	6
Summa-20, Rotor, Recip	X	A 16	X	-	A	A	A
Summit DSL-32,68,100,125	X	A 16	X	-	A	A	A
Sun Minesafe, Sun Safe	F	A 16	X	-	A	A	A
Sundex 8125	F	-	A	-	A	A	A
Suniso 3GS	A	A 15	X	A	A	A	A
Sun-Vis 722	F	-	X	-	A	A	A
Super Hydraulic Oil 100, 150, 220	A	A 15	X	A	A	A	A
SUVA MP 39, 52, 66	X	X	X	X	A	A	A
SYNCON Oil	X	X	X	-	A	A	A
Syndale 2820	F	-	-	-	A	A	A
Synesstic 32,68,100	X	X	X	X	A	A	A
Syn-Flo 70,90	X	A 16	X	-	A	A	A
SYN-O-AD 8478	X	X	A, 7	F	A	A	A
Tannic Acid	A	A 16	A	X	X	F	X
Tar	F	A 16	X	-	X	F	A
Tellus (Shell)	A	A 15	X	A	A	A	A
Texaco 760 Hydrafluid	-	-	X	-	A	A	A
Texaco 766, 763 (200 - 300)	-	-	A	-	F	F	A
Texaco A-Z Oil	A	F 15	X	A	A	A	A
Texaco Spindura Oil 22	F	F 15	X	A	A	A	A
Texaco Way Lubricant 68	A	A 15	X	A	A	A	A

Medium	831	801 837BM 837PU 836 821FR	804	830M 838M	Steel	Brass	Stainless Steel
Thanol-R-650-X	F	-	X	-	A	A	A
Thermanol 60	X	X	X	-	A	A	A
Toluene, Toluol	X	X	X	-	A	A	A
Transmission Oil	A	A 15	X	A	A	A	A
Tribol 1440	F	X	X	F	A	A	A
Trichloroethylene	X	A 16	X	-	X	A	A
Trim-Sol	A	A 16	X	-	A	A	A
Turbinol 50, 1122, 1223	X	X	A, 7	-	A	A	A
Turpentine	X	A 16	X	-	A	A	A
Ucon Hydrolubes	A	A	A	F	A	A	A
UltraChem 215,230,501,751	X	A 16	X	-	A	A	A
Univis J26	A	A 15	X	A	A	A	A
Unleaded Gasoline	-	-	-	-	A	A	A
Unocal 66/3 Mineral Spirits	8	8	X	-	A	A	A
Urea	F	A 16	F	-	F	-	F
Urethane Formulations	A	A 16	-	-	A	A	A
Van Straaten 902	A	A 16	X	-	A	A	A
Varnish	X	A 16	X	-	F	F	A
Varsol	F	8	X	-	A	A	A
Versilube F44, F55	A	A 16	-	-	A	A	A
Vinegar	X	A 16	A	-	F	X	A
Vital 29, 4300, 5230, 5310	X	X	X	-	A	A	A
Volt Esso 35	A	A 16	X	-	A	A	A
Water	A	A	A	A	F	A	A
Water / Glycols	A	A	A	F	A	F	A
Xylene, Xylol	X	X	X	-	A	A	A
Zerol 150	A	A 15	X	A	A	A	A
Zinc Chloride	A	X	A	-	X	X	F
Zinc Sulfate	A	X	A	-	X	A	A

Parker Safety Guide for Selecting and Using Hose, Tubing, Fittings and Related Accessories

Parker Publication No. 4400-B.1-EUR
Revised: March, 2005

WARNING

Failure or improper selection or improper use of hose, tubing, fittings, assemblies or related accessories ("Products") can cause death, personal injury and property damage. Possible consequences of failure or improper selection or improper use of these Products include but are not limited to:

- Fittings thrown off at high speed.
- High velocity fluid discharge.
- Explosion or burning of the conveyed fluid.
- Electrocution from high voltage electric powerlines.
- Contact with suddenly moving or falling objects that are controlled by the conveyed fluid.
- Injections by high-pressure fluid discharge.
- Dangerously whipping Hose.
- Contact with conveyed fluids that may be hot, cold, toxic or otherwise injurious.
- Sparking or explosion caused by static electricity buildup or other sources of electricity.
- Sparking or explosion while spraying paint or flammable liquids.
- Injuries resulting from inhalation, ingestion or exposure to fluids.

Before selecting or using any of these Products, it is important that you read and follow the instructions below. Only Hose from Parker's Stratoflex Products Division is approved for in flight aerospace applications, and no other Hose can be used for such in flight applications.

1.0 GENERAL INSTRUCTIONS

1.1 Scope

This safety guide provides instructions for selecting and using (including assembling, installing, and maintaining) these Products. For convenience, all rubber and/or thermoplastic products commonly called "hose" or "tubing" are called "Hose" in this safety guide. All assemblies made with Hose are called "Hose Assemblies". All products commonly called "fittings" or "couplings" are called "Fittings". All related accessories (including crimping and swaging machines and tooling) are called "Related Accessories". This safety guide is a supplement to and is to be used with, the specific Parker publications for the specific Hose, Fittings and Related Accessories that are being considered for use.

1.2 Fail-Safe

Hose, and Hose Assemblies and Fittings can and do fail without warning for many reasons. Design all systems and equipment in a failsafe mode, so that failure of the Hose or Hose Assembly or Fitting will not endanger persons or property.

1.3 Distribution

Provide a copy of this safety guide to each person that is responsible for selecting or using Hose and Fitting products. Do not select or use Parker Hose or Fittings without thoroughly reading and understanding this safety guide as well as the specific Parker publications for the products considered or selected.

1.4 User Responsibility

Due to the wide variety of operating conditions and applications for Hose and Fittings, Parker and its distributors do not represent or warrant that any particular Hose or Fitting is suitable for any specific end use system. This safety guide does not analyze all technical parameters that must be considered in selecting a product. The user, through its own analysis and testing, is solely responsible for:

- Making the final selection of the Hose and Fitting.
- Assuring that the user's requirements are met and that the application presents no health or safety hazards.
- Providing all appropriate health and safety warnings on the equipment on which the Hose and Fittings are used.
- Assuring compliance with all applicable government and industry standards.

1.5 Additional Questions

Call the appropriate Parker technical service department if you have any questions or require any additional information. See the Parker publication for the product being considered or used, or call 00-800-2727-5374 , or go to www.parker.com, for telephone numbers of the appropriate technical service department.

2.0 HOSE AND FITTING SELECTION INSTRUCTIONS

2.1 Electrical Conductivity

Certain applications require that the Hose be nonconductive to prevent electrical current flow. Other applications require the Hose and the Fitting and the Hose/Fitting interface to be sufficiently conductive to drain off static electricity. Extreme care must be exercised when selecting Hose and Fittings for these or any other applications in which electrical conductivity or nonconductivity is a factor. The electrical conductivity or nonconductivity of Hose and Fittings is dependent upon many factors and may be susceptible to change. These factors include but are not limited to the various materials used to make the Hose and the Fittings, Fitting finish (some Fitting finishes are electrically conductive while others are nonconductive), manufacturing methods (including moisture control), how the Fittings contact the Hose, age and amount of deterioration or damage or other changes, moisture content of the Hose at any particular time, and other factors. The following are considerations for electrically nonconductive and conductive Hose. For other applications consult the individual catalog pages and the appropriate industry or regulatory standards for proper selection.

2.1.1 Electrically Nonconductive Hose

Certain applications require that the Hose be nonconductive to prevent electrical current flow or to maintain electrical isolation. For these applications that require Hose to be electrically nonconductive, including but not limited to applications near high voltage electric lines, only special nonconductive Hose can be used. The manufacturer of the equipment in which the nonconductive Hose is to be used must be consulted to be certain that the Hose and Fittings that are selected are proper for the application. Do not use any Parker Hose or Fitting for any such application requiring nonconductive Hose, including but not limited to applications near high voltage electric lines, unless (i) the application is expressly approved in the Parker technical publication for the product, (ii) the Hose is marked "nonconductive", and (iii) the manufacturer of the equipment on which the Hose is to be used specifically approves the particular Parker Hose and Fitting for such use.

2.1.2 Electrically Conductive Hose

Parker manufacturers special Hose for certain applications that require electrically conductive Hose. Parker manufactures special Hose for conveying paint in airless paint spraying applications. This Hose is labeled "Electrically Conductive Airless Paint Spray Hose" on its layline and packaging. This Hose must be properly connected to the appropriate Parker Fittings and properly grounded in order to dissipate dangerous static charge buildup, which occurs in all airless paint spraying applications. Do not use any other Hose for airless paint spraying, even if electrically conductive. Use of any other Hose or failure to properly connect the Hose can cause a fire or an explosion resulting in death, personal injury, and property damage. Parker manufactures a special Hose for certain compressed natural gas ("CNG") applications where static electricity buildup may occur. Parker CNG Hose assemblies comply with AGA Requirements 1-93, "Hoses for Natural Gas Vehicles and Fuel Dispensers". This Hose is labeled "Electrically Conductive for CNG Use" on its layline and packaging. This Hose must be properly connected to the appropriate Parker Fittings and properly grounded in order to dissipate dangerous static charge buildup, which occurs in, for example, high velocity CNG dispensing or transfer. Do not use any other Hose for CNG applications where static charge buildup may occur, even if electrically conductive. Use of other Hoses in CNG applications or failure to properly connect or ground this Hose can cause a fire or an explosion resulting in death, personal injury, and property damage. Care must also be taken to protect against CNG

permeation through the Hose wall. See section 2.6, Permeation, for more information. Parker CNG Hose is intended for dispenser and vehicle use at a maximum temperature of 82°C / 180°F. Parker CNG Hose should not be used in confined spaces or unventilated areas or areas exceeding 82°C /180°F. Final assemblies must be tested for leaks. CNG Hose Assemblies should be tested on a monthly basis for conductivity per AGA 1-93. Parker manufacturers special Hose for aerospace in flight applications. Aerospace in flight applications employing Hose to transmit fuel, lubricating fluids and hydraulic fluids require a special Hose with a conductive inner tube. This Hose for in flight applications is available only from Parker's Stratoflex Products Division. Do not use any other Parker Hose for in flight applications, even if electrically conductive. Use of other Hoses for in flight applications or failure to properly connect or ground this Hose can cause a fire or an explosion resulting in death, personal injury , and property damage. These Hose assemblies for in flight applications must meet all applicable aerospace industry, aircraft engine, and aircraft requirements.

2.2 Pressure

Hose selection must be made so that the published maximum recommended working pressure of the Hose is equal to or greater than the maximum system pressure. Surge pressures or peak transient pressures in the system must be below the published maximum working pressure for the Hose. Surge pressures and peak pressures can usually only be determined by sensitive electrical instrumentation that measures and indicates pressures at millisecond intervals. Mechanical pressure gauges indicate only average pressures and cannot be used to determine surge pressures or peak transient pressures. Published burst pressure ratings for Hose is for manufacturing test purposes only and is no indication that the Product can be used in applications at the burst pressure or otherwise above the published maximum recommended working pressure.

2.3 Suction

Hoses used for suction applications must be selected to insure that the Hose will withstand the vacuum and pressure of the system. Improperly selected Hose may collapse in suction application.

2.4 Temperature

Be certain that fluid and ambient temperatures, both steady and transient, do not exceed the limitations of the Hose. Temperatures below and above the recommended limit can degrade Hose to a point where a failure may occur and release fluid. Properly insulate and protect the Hose Assembly when routing near hot objects (e.g. manifolds). Do not use any Hose in any application where failure of the Hose could result in the conveyed fluids (or vapors or mist from the conveyed fluids) contacting any open flame, molten metal, or other potential fire ignition source that could cause burning or explosion of the conveyed fluids or vapors.

2.5 Fluid Compatibility

Hose Assembly selection must assure compatibility of the Hose tube, cover, reinforcement, and Fittings with the fluid media used. See the fluid compatibility chart in the Parker publication for the product being considered or used. This information is offered only as a guide. Actual service life can only be determined by the end user by testing under all extreme conditions and other analysis. Hose that is chemically compatible with a particular fluid must be assembled using Fittings and adapters containing likewise compatible seals.

2.6 Permeation

Permeation (that is, seepage through the Hose) will occur from inside the Hose to outside when Hose is used with gases, liquid and gas fuels, and refrigerants (including but not limited to such materials as helium, diesel fuel, gasoline, natural gas, or LPG). This permeation may result in high concentrations of vapors which are potentially flammable, explosive, or toxic, and in loss of fluid. Dangerous explosions, fires, and other hazards can result when using the wrong Hose for such applications. The system designer must take into account the fact that this permeation will take place and must not use Hose if this permeation could be hazardous. The system designer must take into account all legal, government, insurance, or any other special regulations which govern the use of fuels and refrigerants. Never use a Hose even though the fluid compatibility is acceptable without considering the potential hazardous effects that can result from permeation through the Hose Assembly. Permeation of moisture from outside the Hose to inside the Hose will also occur in Hose assemblies, regardless of internal pressure. If this moisture permeation would have detrimental effects (particularly, but not limited to refrigeration and air conditioning systems), incorporation of sufficient drying capacity in the system or other appropriate system safeguards should be selected and used.

2.7 Size

Transmission of power by means of pressurized fluid varies with pressure and rate of flow. The size of the components must be adequate to keep pressure losses to a minimum and avoid damage due to heat generation or excessive fluid velocity.

2.8 Routing

Attention must be given to optimum routing to minimize inherent problems (kinking or flow restriction due to Hose collapse, twisting of the Hose, proximity to hot objects or heat sources).

2.9 Environment

Care must be taken to insure that the Hose and Fittings are either compatible with or protected from the environment (that is, surrounding conditions) to which they are exposed. Environmental conditions including but not limited to ultraviolet radiation, sunlight, heat, ozone, moisture, water, salt water, chemicals, and air pollutants can cause degradation and premature failure.

2.10 Mechanical Loads

External forces can significantly reduce Hose life or cause failure. Mechanical loads which must be considered include excessive flexing, twist, kinking, tensile or side loads, bend radius, and vibration. Useof swivel type Fittings or adapters may be required to insure no twist is put into the Hose. Unusual applications may require special testing prior to Hose selection.

2.11 Physical Damage

Care must be taken to protect Hose from wear, snagging, kinking, bending smaller that minimum bend radius, and cutting, any of which can cause premature Hose failure. Any Hose that has been kinked or bent to a radius smaller than the minimum bend radius, and any Hose that has been cut or is cracked or is otherwise damaged, should be removed and discarded.

2.12 Proper End Fitting

See instructions 3.2 through 3.5. These recommendations may be substantiated by testing to industry standards such as EN853, EN854, EN857, ISO17165-2, SAE J517 for hydraulic applications, or MIL-A-5070, AS1339, or AS3517 for Hoses from Parker's Stratoflex Products Division for aerospace applications.

2.13 Length

When establishing a proper Hose length, motion absorption, Hose length changes due to pressure, and Hose and machine tolerances and movement must be considered.

2.14 Specifications and Standards

When selecting Hose and Fittings, government, industry, and Parker specifications and recommendations must be reviewed and followed as applicable.

2.15 Hose Cleanliness

Hose components may vary in cleanliness levels. Care must be taken to insure that the Hose Assembly selected has an adequate level of cleanliness for the application.

2.16 Fire Resistant Fluids

Some fire resistant fluids that are to be conveyed by Hose require use of the same type of Hose as used with petroleum base fluids. Some such fluids require a special Hose, while a few fluids will not work with any Hose at all. See instructions 2.5 and 1.5. The wrong Hose may fail after a very short service. In addition, all liquids but pure water may burn fiercely under certain conditions, and even pure water leakage may be hazardous.

2.17 Radiant Heat

Hose can be heated to destruction without contact by such nearby items as hot manifolds or molten metal. The same heat source may then initiate a fire. This can occur despite the presence of cool air around the Hose.

2.18 Welding or Brazing

When using a torch or arc-welder in close proximity to hydraulic lines, the hydraulic lines should be removed or shielded with appropriate fire resistant materials. Flame or weld spatter could burn through the Hose and possibly ignite escaping fluid resulting in a catastrophic failure. Heating of plated parts, including Hose Fittings and adapters, above 450°F (232°C) such as during welding, brazing, or soldering may emit deadly gases.

2.19 Atomic Radiation

Atomic radiation affects all materials used in Hose assemblies. Since the long-term effects may be unknown, do not expose Hose assemblies to atomic radiation.

2.20 Aerospace Applications

The only Hose and Fittings that may be used for in flight aerospace applications are tHose available from Parker's Stratoflex Products Division. Do not use any other Hose or Fittings for in flight applications. Do not use any Hose or Fittings from Parker's Stratoflex Products Division with any other Hose or Fittings, unless expressly approved in writing by the engineering manager or chief engineer of Stratoflex Products Division and verified by the user's own testing and inspection to aerospace industry standards.

2.21 Unlocking Couplings

Ball locking couplings or other couplings with disconnect sleeves can unintentionally disconnect if they are dragged over obstructions or if the sleeve is bumped or moved enough to cause disconnect. Threaded couplings should be considered where there is a potential for accidental uncoupling.

3.0 HOSE AND FITTING ASSEMBLY AND INSTALLATION INSTRUCTIONS

3.1 Component Inspection

Prior to assembly, a careful examination of the Hose and Fittings must be performed. All components must be checked for correct style, size, catalog number, and length. The Hose must be examined for cleanliness, obstructions, blisters, cover looseness, kinks, cracks, cuts or any other visible defects. Inspect the Fitting and sealing surfaces for burrs, nicks, corrosion or other imperfections. Do NOT use any component that displays any signs of nonconformance.

3.2 Hose and Fitting Assembly

Do not assemble a Parker Fitting on a Parker Hose that is not specifically

listed by Parker for that Fitting, unless authorized in writing by the engineering manager or chief engineer of the appropriate Parker division. Do not assemble a Parker Fitting on another manufacturers Hose or a Parker Hose on another manufacturers Fitting unless (i) the engineering manager or chief engineer of the appropriate Parker division approves the Assembly in writing or that combination is expressly approved in the appropriate Parker literature for the specific Parker product, and (ii) the user verifies the Assembly and the application through analysis and testing. For Parker Hose that does not specify a Parker Fitting, the user is solely responsible for the selection of the proper Fitting and Hose Assembly procedures. See instruction 1.4. The Parker published instructions must be followed for assembling the Fittings on the Hose. These instructions are provided in the Parker Fitting catalog for the specific Parker Fitting being used, or by calling 00-800-2727-5374, or at www.parker.com.

3.3 Related Accessories

Do not crimp or swage any Parker Hose or Fitting with anything but the listed swage or crimp machine and dies in accordance with Parker published instructions. Do not crimp or swage another manufacturers Fitting with a Parker crimp or swage die unless authorized in writing by the engineering manager of chief engineer of the appropriate Parker division.

3.4 Parts

Do not use any Parker Fitting part (including but not limited to socket, shell, nipple, or insert) except with the correct Parker mating parts, in accordance with Parker published instructions, unless authorized in writing by the engineering manager or chief engineer of the appropriate Parker division.

3.5 Reusable/Permanent

Do not reuse any field attachable (reusable) Hose Fitting that has blown or pulled off a Hose. Do not reuse a Parker permanent Hose Fitting (crimped or swaged) or any part thereof. Complete Hose Assemblies may only be reused after proper inspection under section 4.0. Do not assemble Fittings to any previously used hydraulic Hose that was in service, for use in a fluid power application.

3.6 Pre-Installation Inspection

Prior to installation, a careful examination of the Hose Assembly must be performed. Inspect the Hose Assembly for any damage or defects. Do NOT use any Hose Assembly that displays any signs of nonconformance.

3.7 Minimum Bend Radius

Installation of a Hose at less than the minimum listed bend radius may significantly reduce the Hose life. Particular attention must be given to preclude sharp bending at the Hose to Fitting juncture. Any bending during installation at less than the minimum bend radius must be avoided. If any Hose is kinked during installation, the Hose must be discarded.

3.8 Twist Angle and Orientation

Hose Assembly installation must be such that relative motion of machine components does not produce twisting.

3.9 Securement

In many applications, it may be necessary to restrain, protect, or guide the Hose to protect it from damage by unnecessary flexing, pressure surges, and contact with other mechanical components. Care must be taken to insure such restraints do not introduce additional stress or wear points.

3.10 Proper Connection of Ports

Proper physical installation of the Hose Assembly requires a correctly installed port connection insuring that no twist or torque is transferred to the Hose when the Fittings are being tightened or otherwise during use.

3.11 External Damage

Proper installation is not complete without insuring that tensile loads, side loads, kinking, flattening, potential abrasion, thread damage, or damage to sealing surfaces are corrected or eliminated. See instruction 2.10.

3.12 System Checkout

All air entrapment must be eliminated and the system pressurized to the maximum system pressure (at or below the Hose maximum working pressure) and checked for proper function and freedom from leaks. Personnel must stay out of potential hazardous areas while testing and using.

3.13 Routing

The Hose Assembly should be routed in such a manner so if a failure does occur, the escaping media will not cause personal injury or property damage. In addition, if fluid media comes in contact with hot surfaces, open flame, or sparks, a fire or explosion may occur. See section 2.4.

4.0 HOSE AND FITTING MAINTENANCE AND REPLACEMENT INSTRUCTIONS

4.1

Even with proper selection and installation, Hose life may be significantly reduced without a continuing maintenance program. The severity of the application, risk potential from a possible Hose failure, and experience with any Hose failures in the application or in similar applications should determine the frequency of the inspection and the replacement for the Products so that Products are replaced before any failure occurs. A maintenance program must be established and followed by the user and, at minimum, must include instructions 4.2 through 4.7.

4.2 Visual Inspection Hose/Fitting

Any of the following conditions require immediate shut down and replacement of the Hose Assembly:

- Fitting slippage on Hose,
- Damaged, cracked, cut or abraded cover (any reinforcementexposed);
- Hard, stiff, heat cracked, or charred Hose;
- Cracked, damaged, or badly corroded Fittings;
- Leaks at Fitting or in Hose;
- Kinked, crushed, flattened or twisted Hose; and
- Blistered, soft, degraded, or loose cover.

4.3 Visual Inspection All Other

The following items must be tightened, repaired, corrected or replaced as required:

- Leaking port conditions;
- Excess dirt buildup;
- Worn clamps, guards or shields; and
- System fluid level, fluid type, and any air entrapment.

4.4 Functional Test

Operate the system at maximum operating pressure and check for possible malfunctions and leaks. Personnel must avoid potential hazardous areas while testing and using the system. See section 2.2.

4.5 Replacement Intervals

Hose assemblies and elastomeric seals used on Hose Fittings and adapters will eventually age, harden, wear and deteriorate under thermal cycling and compression set. Hose Assemblies and elastomeric seals should be inspected and replaced at specific replacement intervals, based on previous service life, government or industry recommendations, or when failures could result in unacceptable downtime, damage, or injury risk. See section 1.2.

4.6 Hose Inspection and Failure

Hydraulic power is accomplished by utilizing high-pressure fluids to transfer energy and do work. Hoses, Fittings, and Hose Assemblies all contribute to this by transmitting fluids at high pressures. Fluids under pressure can be dangerous and potentially lethal and, therefore, extreme caution must be exercised when working with fluids under pressure and handling the Hoses transporting the fluids. From time to time, Hose Assemblies will fail if they are not replaced at proper time intervals. Usually these failures are the result of some form of misapplication, abuse, wear, or failure to perform proper maintenance. When Hoses fail, generally the highpressure fluids inside escape in a stream which may or may not be visible to the user. Under no circumstances should the user attempt to locate the leak by “feeling” with their hands or any other part of their body. High-pressure fluids can and will penetrate the skin and cause severe tissue damage and possibly loss of limb. Even seemingly minor hydraulic fluid injection injuries must be treated immediately by a physician with knowledge of the tissue damaging properties of hydraulic fluid. If a Hose failure occurs, immediately shut down the equipment and leave the area until pressure has been completely released from the Hose Assembly. Simply shutting down the hydraulic pump may or may not eliminate the pressure in the Hose Assembly. Many times check valves, etc., are employed in a system and can cause pressure to remain in a Hose Assembly even when pumps or equipment are not operating. Tiny holes in the Hose, commonly known as pinholes, can eject small, dangerously powerful but hard to see streams of hydraulic fluid. It may take several minutes or even hours for the pressure to be relieved so that the Hose Assembly may be examined safely. Once the pressure has been reduced to zero, the Hose Assembly may be taken off the equipment and examined. It must always be replaced if a failure has occurred. Never attempt to patch or repair a Hose Assembly that has failed. Consult the nearest Parker distributor or the appropriate Parker division for Hose Assembly replacement information. Never touch or examine a failed Hose Assembly unless it is obvious that the Hose no longer contains fluid under pressure. The high-pressure fluid is extremely dangerous and can cause serious and potentially fatal injury.

4.7 Elastomeric seals

Elastomeric seals will eventually age, harden, wear and deteriorate under thermal cycling and compression set. Elastomeric seals should be inspected and replaced.

4.8 Refrigerant gases

Special care should be taken when working with refrigeration systems. Sudden escape of refrigerant gases can cause blindness if the escaping gases contact the eye and can cause freezing or other severe injuries if it contacts any other portion of the body.

4.9 Compressed natural gas (CNG)

Parker CNG Hose Assemblies should be tested after installation and before use, and at least on a monthly basis per AGA 1-93 Section
4.2 “Visual Inspection Hose/Fitting”. The recommended procedure is to pressurize the Hose and check for leaks and to visually inspect the Hose for damage.
Caution: Matches, candles, open flame or other sources of ignition shall not be used for Hose inspection. Leak check solutions should be rinsed off after use.

HANLEY CONTROLS
CLONMEL
www.hccl.ie

Parker Hannifin Corporation

About Parker Hannifin Corporation

Parker Hannifin is a leading global motion-control company dedicated to delivering premier customer service.
A Fortune 500 corporation listed on the New York Stock Exchange (PH), our components and systems comprise over 1,400 product lines that control motion in some 1,000 industrial and aerospace markets.
Parker is the only manufacturer to offer its customers a choice of hydraulic, pneumatic, and electromechanical motion-control solutions. Our Company has the largest distribution network in its field, with over 7,500 distributors serving nearly 400,000 customers worldwide.

Parker's Charter

To be a leading worldwide manufacturer of components and systems for the builders and users of durable goods.
More specifically, we will design, market and manufacture products controlling motion, flow and pressure. We will achieve profitable growth through premier customer service.

Product Information

Customers seeking product information, the location of a nearby distributor, or repair services will receive prompt attention by calling the Parker Product Information Centre.
The Centre can be called toll free from France, Germany, Austria, Switzerland or the United Kingdom. You will be answered by a Parker employee in your own language.
Call Freephone: 00800 27 27 5374 (00800 C PARKER).

The Aerospace Group
is a leader in the development, design, manufacture and servicing of control systems and components for aerospace and related high-technology markets, while achieving growth through premier customer service.

The Climate & Industrial
Controls Group designs, manufactures and markets system-control and fluidhandling components and systems to refrigeration, air-conditioning and industrial customers worldwide.

The Fluid Connectors Group
designs, manufactures and markets rigid and flexible connectors, and associated products used in pneumatic and fluid systems.

The Seal Group
designs, manufactures and distributes industrial and commercial sealing devices and related products by providing superior quality and total customer satisfaction.

The Hydraulics Group
designs, produces and markets a full spectrum of hydraulic components and systems to builders and users of industrial and mobile machinery and equipment.

The Filtration Group
designs, manufactures and markets quality filtration and clarification products, providing customers with the best value, quality, technical support, and global availability.

The Automation Group
is a leading supplier of pneumatic and electromechanical components and systems to automation customers worldwide.

The Instrumentation Group
is a global leader in the design, manufacture and distribution of high-quality critical flow components for worldwide process instrumentation, ultrahigh-purity, medical and analytical applications.

HANLEY CONTROLS
CLONMEL

www.hccl.ie

Parker Fluid Connectors Group Europe

Parker Hannifin Ges. mbH
AT - 2700 Wiener Neustadt
Tel: +43 (0) 26 22 23 501

Parker Hannifin Corporation
AE - Abu Dhabi
Tel: +971 2 678 8587

Parker Hannifin Corporation
AZPAR - Techn. Repr. for
Parker Hannifin plc
AZ - 1000 Baku
Tel: +994 12 598 3966

Parker Hannifin S.A.-N.V.
BE - 1400 Nivelles
Tel: +32 (0) 67 280 900

Parker Hannifin Corporation
BY - 220030 Minsk
Tel: +375 17 209 9399

Parker Hannifin s.r.o.
CZ - 250 67 Klecany
Tel: +420 284 083 111

Parker Hannifin GmbH & Co. KG
DE - 41564 Kaarst
Tel: +49 (0) 2131 40 16 0

Parker Hannifin Danmark A/S
DK - 2750 Ballerup
Tel: +45 43 56 04 00

Parker Hannifin España S.A
ES - 28850 Torrejón de Ardoz
(Madrid)
Tel: +34 91 675 73 00

Parker Hannifin Corporation
EG - Cairo
Tel: +20 2 519 4018

Parker Hannifin France SAS
FR - 74130 Contamine-sur-Arve
Tel: +33 (0) 4 50 25 80 25

Parker Hannifin Oy
FI - 01520 Vantaa
Tel: +358 (0) 20 753 2500

Parker Hannifin Corporation
GR - 171 21 Athens
Tel: +30 210 933 6450

Parker Hannifin Corporation
HU - 1149 Budapest
Tel: +36 (1) 220 4155

Parker Sales (Ireland) Ltd
IE - Baldonell, Co. Dublin
Tel: +353 (0) 1 4666370

Parker Hannifin S.p.A.
IT- 20094 Corsico (MI)
Tel: +39 02 451 921

Parker Hannifin Corporation
Gateway Ventures Ca Ltd.
KZ - 480100 Almaty
Tel: +7 327 2 505 800

Parker Hannifin Corporation
LV - 1007 Riga
Tel: +371 74 52 601

Parker Hannifin A/S
NO - 1402 Ski
Tel: +47 64 91 10 00

Parker Hannifin B.V.
NL - 7570 AH Oldenzaal
Tel: +31 (0) 541 585 000

Parker Hannifin Sp. z o.o.
PL - 02-235 Warszawa
Tel: +48 (0) 22 573 24 00

Parker Hannifin Portugal Lda
PT - 4450-625 Leça da Palmeira
Tel: +351 22 999 7360

Parker Hannifin Corporation
Hidro Consulting Impex Srl
RO - 021381 Bucharest
Tel: +40 21 252 1382

Parker Hannifin LLC
RU - 123083 Moscow
Tel: +7 495 645 2156

Parker Hannifin Corporation
RU - 693012 Yuzhno-Sakhalinsk
Tel: +7 4242 42 35 27

Parker Hannifin LLC
RU - 197348 St. Petersburg
Tel: +7 812 320 49 30

Parker Hannifin LLC
RU - 660049 Krasnoyarsk
Tel: +7 3912 52 73 35

Parker Hannifin AB
SE - 163 08 Spånga
Tel: +46 (0) 8 5979 5000

Parker Hannifin Corporation
SI - 8000 Novo Mesto
Tel: +386 (7) 337 6650

Parker Hannifin Corporation
TR - 34067 Merter/Istanbul
Tel: +90 212 482 91 06/07

Parker Hannifin Corporation
UA - 01004 Kiev
Tel: +380 44 494 2731

Parker Hannifin Ltd.
UK - Derby DE24 8JA
Tel: +44 (0) 1332 36 56 31

Parker Hannifin Africa
ZA - Kempton Park
Tel: +27 11 961 0700

Internet: http://www.parker.com/europe

For further information on other Parker Products, call the European Product Information Centre free of charge on 00800 27 27 5374.

Parker

Katalog 4482/UK
© 2007 Parker Hannifin/037
punctum/PlantijnCasparie 03/2007